Bridge Maintenance – Inspection and Evaluation of Bridge Decks

By

Mark Rossow, Ph.D., P.E.

PDHLibrary Course No 2018031
7 PDH HOURS

FHWA Bridge Inspector's Manual Section 5—Bridge Decks (7 PDH)

Instructor: Mark Rossow, PhD, PE

COURSE CONTENT

The Federal Highway Administration's Bridge Inspector's Reference Manual (BIRM) is a comprehensive manual on programs, procedures, and techniques for inspecting and evaluating a variety of in-service highway bridges. BIRM serves as the basis of a comprehensive National Highway Institute training program in bridge-safety inspection. The present course is based on BIRM's Chapter 7, Inspection and Evaluation of Bridge Decks and Areas Adjacent to Bridge Decks, and discusses

1) timber decks;
2) concrete decks;
3) fiber reinforces polymer decks;
4) steel decks;
5) deck joints, drainage systems, and lighting and signs; and
6) safety features.

LEARNING OBJECTIVES

At the conclusion of this course, the student will

- Be familiar with design characteristics for timber, concrete, and steel decks;
- Know wearing surfaces for timber, concrete, and steel decks;
- Be cognizant of protective systems for timber, concrete, and steel decks;
- Understand principles of common defects for timber, concrete, and steel decks;
- Be acquainted with inspection procedures and locations for timber, concrete, and steel decks;
- Recognize the principles of evaluation for timber, concrete, and steel decks;
- Know principles of identification and appraisal for safety components;
- Understand principles of safety feature inspection;
- Be acquainted with safety features design criteria; and
- Recognize the principles of crash testing criteria in ensuring component safety.

This course is intended primarily for civil, construction, and structural engineers, and would be of particular interest to consulting engineers or to engineers serving in government organizations concerned with the safety of bridges.

This course includes a true/false and multiple-choice quiz at the end, which is designed to highlight the general concepts of the course material.

This course is based on Chapter 7 (Inspection and Evaluation of Bridge Decks and Areas Adjacent to Bridge Decks**)** of the Federal Highway Administration Bridge Inspector's Reference Manual, Publication No. FHWA NHI 12-049 December, 2012.

Table of Contents

Chapter 7
Inspection and Evaluation of Bridge Decks and Areas Adjacent to Bridge Decks

7.1 Timber Decks 7.1.1

7.1.1 Introduction 7.1.1

7.1.2 Design Characteristics 7.1.1
- Plank Decks 7.1.2
- Nailed Laminated Decks 7.1.2
- Glued-laminated Deck Panels 7.1.2
- Stressed-laminated Decks 7.1.3
- Structural Composite Lumber Decks 7.1.4

7.1.3 Wearing Surfaces 7.1.5
- Timber 7.1.5
- Bituminous 7.1.6
- Concrete 7.1.6

7.1.4 Protective Systems 7.1.6
- Water Repellents 7.1.6
- Preservatives 7.1.6
- Fire Retardants 7.1.6
- Paint 7.1.7

7.1.5 Overview of Common Deficiencies 7.1.7

7.1.6 Inspection Methods and Locations 7.1.7
- Methods 7.1.7
  - Visual 7.1.7
  - Physical 7.1.7
  - Advanced Inspection Methods 7.1.8
- Locations 7.1.9

7.1.7 Evaluation 7.1.12
- NBI Component Condition Rating Guidelines 7.1.12
- Element Level Condition State Assessment 7.1.12

This page intentionally left blank

Chapter 7
Inspection and Evaluation of Bridge Decks and Areas Adjacent to Bridge Decks

Topic 7.1 Timber Decks

7.1.1 Introduction

Timber can be desirable for use as a bridge decking material because it is resistant to deicing agents, which typically harm concrete and steel, and it is a renewable source of material. Timber can also withstand relatively larger loads over a short period of time when compared to other bridge materials. Finally, timber is easy to fabricate in any weather condition and is lightweight.

Like any investment, a timber bridge must be inspected and maintained on a regular basis to maximize the investment. The fact is that a poor design, poor construction, and poor management practices can be major factors in the degradation of a timber structure. Over the life of a timber bridge, deficiency can be minimized, by identifying and recording information on the condition and performance of the structure. With such information, timely maintenance operations can be undertaken to correct situations that could otherwise lead to extensive repair and even replacement. Bridge inspectors have the difficult task of accurately assessing the condition of an existing timber member, due to the fact that most decay occurs on the inside of a timber member. Timber inspection is a learned process that requires some knowledge and understanding of wood pathology, wood technology, and timber engineering.

7.1.2 Design Characteristics

Timber decks are normally referred to as decking or timber flooring, and the term is generally limited to the roadway portion which receives vehicular loads. Timber decks are usually considered non-composite because of the inefficient shear transfer through the attachment devices between the deck and superstructure. The basic types of timber decks are:

- Plank decks
- Nailed laminated decks
- Glued-laminated deck panels
- Stressed-laminated decks
- Structural composite lumber decks

Plank Decks

Plank decks consist of timber boards laid transversely across the bridge (see Figure 7.1.1). The planks are individually attached to the superstructure using spikes or bolt clamps, depending on the superstructure material. It is common for plank decks to have 2-inch depth timbers nailed longitudinally on top of the planks to distribute load and retain the bituminous wearing surface.

Figure 7.1.1 Plank Deck

Nailed Laminated Decks

Nailed laminated decks consist of timber planks with the wide dimensions of the planks in the vertical position and laminated by through-nailing to the adjacent planks (see Figure 7.1.2). On timber beams, each lamination is toenailed to the beam. On steel beams, clamp bolts are used as required. In either case, laminates span across the beams and are perpendicular to the roadway centerline.

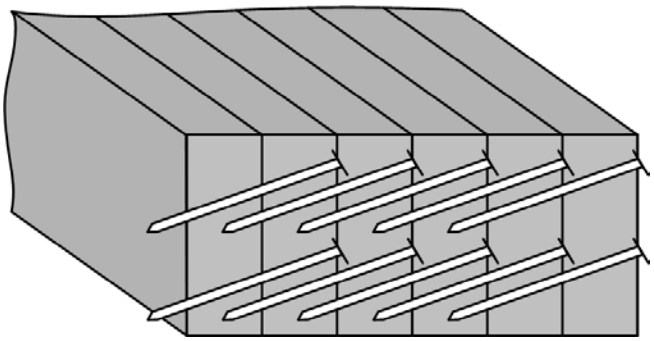

Figure 7.1.2 Section of a Nailed Laminated Deck

Glued-laminated Deck Panels

Glue-laminated (Glulam) deck panels are an engineered wood product in which pieces of sawn lumber are attached together with waterproof glue adhesives. Glulam deck panels come in sizes usually 4 feet wide. The panels can be laid transverse to the traffic depending on superstructure orientation. In some applications, the panels are interconnected with dowels. There are several techniques used to attach glued-laminated decks to the superstructure or a floor system, including nailing, bolting, reverse bolting, clip angles and bolts, and nailers (see Figure 7.1.3).

The nailing method is generally not preferred due to the possibility of the nails being pried loose by the vehicle traffic vibrations and deflections.

Bolting the deck to the superstructure or floor system provides a greater resistance to uplift than nailing, but bolts may still be pried loose.

Reverse bolting involves fastening the bolts to the underside of the deck on either side of the superstructure members, thereby preventing the lateral movement of the deck. This is a rare type of connection.

Clip angles and bolts involve attaching clip angles to the beams or stringers and then using bolts to attach the clip angles to the deck.

Nailers are planks that run along the top of steel superstructure flanges. This technique involves the bolting of the nailers to the flanges and nailing the timber planks to the nailers. This prevents the costly bolting of all planks to the steel superstructure.

Figure 7.1.3 Glued-laminated Deck Panels Attached to Superstructure

Stressed-laminated Decks

Stressed-laminated decks are constructed of sawn lumber glulam wood post-tensioned transversely utilizing high strength steel bars. Stressed timber decks consist of thick, laminated timber planks which usually run longitudinally in the direction of the bridge span. The timber planks vary in length and size. The laminations are squeezed together by prestressing (post-tensioning) high strength steel bars, spaced approximately 24 inches on center. With a hydraulic jacking system tensioning the bars, they are passed through predrilled holes in the laminations. Steel channel bulkheads or anchorage plates are then used to anchor the prestressing bars. This prestressing operation creates friction connections between the laminations, thereby enabling the laminated planks to span longer distances (see Figure 7.1.4).

Prestressed laminated decks are used on a variety of bridge superstructures, such as trusses and multi-beam bridges, and they can be used as the superstructure itself for shorter span bridges.

Figure 7.1.4 Stressed-laminated Deck

Structural Composite Lumber Decks

Structural composite lumber (SCL) decks include laminated veneer lumber (LVL) and parallel strand lumber (PSL). Laminated veneer lumber is fabricated by gluing together thin sheets of rotary-peeled wood veneer with a waterproof adhesive. Parallel strand lumber is fabricated by taking narrow strips of veneer and compressing and gluing them together with the wood grain parallel. SCL bridge decks are gaining popularity and are comprised of a parallel series of fully laminated LVL or PSL T-beams or a parallel series of fully laminated LVL or PSL box beams. The T-beams and box sections run parallel with the direction of traffic and are cambered to meet the needs of the specific bridge site. The box sections or T-beams are stress laminated together by either placing steel bars or prestressing strands through the top flanges (timber deck area) and/or through the outside edges of the box section top flanges. Steel channels or bearing plates are then placed on the bars or strands with double nuts. Standard strand chucks are placed on the opposite end to initiate the prestressing process. The prestressing bars or strands are generally epoxy coated to resist corrosion (see Figure 7.1.5).

See Topic 6.1 for various T-beam and box shape configurations used for Structure Composite Lumber Decks.

Figure 7.1.5 Structural Composite Lumber Deck Using Box Sections

7.1.3 Wearing Surfaces

The wearing surface of a timber deck is constructed of timber, bituminous materials, or concrete. Bituminous wearing surfaces can either be hot mix asphalt or a chip and seal method. Concrete wearing surfaces for timber decks are less common than timber or bituminous wearing surfaces, although some exist.

Timber

A timber wearing surface may consist of longitudinal timbers placed over the transverse decking. Runner planks or "running boards" are planks placed longitudinally, or parallel with traffic, only in the wheel paths where the vehicles ride (see Figure 7.1.6).

Figure 7.1.6 Timber Wearing Surface on a Timber Plank Deck

Bituminous

Bituminous or asphalt wearing surfaces generally utilize a coarse aggregate mix. The aggregate is mixed with a binder substance that holds the aggregate together and bonds the surfacing to the deck. Asphalt is a popular bituminous wearing surface for timber decks. However, it is not commonly used on plank decks because deflection of the planks will cause the asphalt to break apart.

Concrete

While concrete may be used as a wearing surface on timber decks, it is not frequently used for this purpose. However, new composite studies between concrete overlays and timber decks are being performed. These studies generally involve a timber deck with steel shear studs doweled into the timber deck with a concrete overlay completing the composite action.

7.1.4 Protective Systems

Protective systems are necessary to resist decay in timber bridge decks. Water repellents, preservatives, fumigants, fire retardants, and paints are some of the common timber protective materials. In order for the protective material to serve its purpose, the surface of the timber has to be properly prepared. See Topic 6.1.6 for detailed information on protective systems.

Water Repellents

Water repellents help to prevent water absorption in timber decks, which slows decay by molds and weathering. The amount of water in wood directly affects the amount of expansion and contraction due to temperature. Water repellents are used to lower the water content of timber deck members and will be reapplied periodically. Because it needs to be applied rather frequently, it is not the best means of protecting timber structures.

Preservatives

Timber preservatives are usually applied by pressure, which forces the preservative into the timber deck member. The deeper the preservative penetration, the greater the protection from decay by fungi. Preservatives are the best way to protect against decay.

Preservatives are either oil-based or water-based. Some common oil-based preservatives are coal-tar creosote, pentachlorophenol, copper naphthenate and oxine copper. Coal-tar creosote is no longer used to health concerns; pentachlorophenol is used as an above-ground decay inhibitor; copper napthenate can be used for above-ground, ground contact and only freshwater applications since it is not suited for salt water applications; and oxine copper is used for above-ground applications once dissolved in a heavy oil.

Chromated copper arsenate (CCA), ammonical copper zinc arsenate (ACZA), alkalkine copper quaternary (ACQ) and copper azole are common water-based preservatives. CCA was the most popular preservative used from the late 1970s until 2004; ACQ and Copper azole have both been recently developed while ACZA is no longer available in the United States.

Fire Retardants

Fire retardants slow the spread of fire and prolong the time required to ignite the wood. The two main types of fire retardants are pressure impregnated salts and intumescent paints. These retardants insulate the wood, but adversely affect the material properties of wood.

Paint

Paints for timber decks can either be oil-based, oil-alkyd or latex-based. Oil-based paints provide the best barrier from moisture but is not very durable. Oil-alkyd paints have more durability than oil-based paints but contain lead pigments which cause various health hazards. Latex-based paints, on the other hand, are very flexible and resistant to chemicals.

7.1.5 Overview of Common Deficiencies

A prepared bridge inspector will know what to look for prior to the inspection. The following is a list of common deficiencies that may be encountered when inspecting timber bridge decks. Refer to Topic 6.1 for a detailed description of these common deficiencies:

- Inherent defects: checks, splits, shakes, knots
- Fungi
- Insects
- Marine borers
- Chemical attack
- Delaminations
- Loose connections
- Surface depressions
- Fire
- Impact or collision
- Wear, abrasion and mechanical wear
- Overstress
- Weathering or warping
- Protective coating failure

7.1.6 Inspection Methods and Locations

Methods

Visual

The inspection of timber decks for deficiency and decay is primarily a visual activity. All exposed surfaces of the timber decks will receive a close visual inspection.

Physical

However, physical examinations will also be used for suspect areas. The most common physical inspection techniques for timber include sounding, probing, boring or drilling, core sampling, and electrical testing. An inspection hammer will be used initially to evaluate the subsurface condition of the planks and the tightness of the fasteners. In suspect areas, probing can be used to reveal decayed planks using a pick test or penetration test (see Figure 7.1.7). A pick test involves lifting a small sliver of wood with a pick or pocketknife and observing whether or

not it splinters or breaks abruptly. Sound wood splinters, while decayed wood breaks abruptly.

If the deck planks are over 2 inches thick, suspect planks will be drilled to determine the extent of decay. If decks are drilled, a protectant will be applied and the hole will be plugged with a wooden dowel.

Figure 7.1.7 Inspector Probing Timber with a Pick at Reflective Cracks in the Asphalt Wearing Surface

Advanced Inspection Methods

Several advanced methods are available for timber inspection. Nondestructive methods, described in Topic 15.1.2, include:

- Sonic testing
- Spectral analysis
- Ultrasonic testing
- Vibration

Other methods, described in Topic 15.1.3, include:

- Boring or drilling
- Moisture content
- Probing
- Field ohmmeter

Locations

Timber deck inspection generally includes visually interpreting the degree of decay on the top and, if visible, the bottom and sides of the deck. Also, all visible fastening devices and bearing areas will be inspected. In all instances, it is helpful to have the previous inspection report so that the progression of any deficiency can be noted. This provides a more meaningful inspection.

The primary locations for timber deck inspection include:

- **Areas exposed to traffic** – examine for wear, weathering, and impact damage (see Figure 7.1.8)
- **Bearing and shear areas** where the timber deck contacts the supporting superstructure – inspect for crushing, decay, and fastener deficiencies (see Figure 7.1.9)
- **Tension areas** between the support points – investigate for flexure damage, such as splitting, sagging, and cracks
- **Areas exposed to drainage** – check for decay, particularly in areas exposed to drainage (see Figure 7.1.10)
- **Outside edges of deck** – inspect for decay
- **Connections –** note any looseness that may have developed from inadequate nailing or bolting, or where the spikes have worked loose. Observation under passing traffic will reveal looseness or excessive deflection in the members
- **Nailed laminated areas –** swelling and shrinking from wetting and drying cause a gradual loosening of the nails, displacing the laminations; this permits moisture to penetrate the deck and superstructure, eventually leading to decay and damage of the deck. Check for loose, corroded or damaged nails
- **Prestressing anchorages** – check for tightness, corrosion, crushing, and decay (see Figure 7.1.11)
- **Fire damage** – check for any section loss or member damage caused by fire

Figure 7.1.8 Wear and Weathering on a Timber Deck

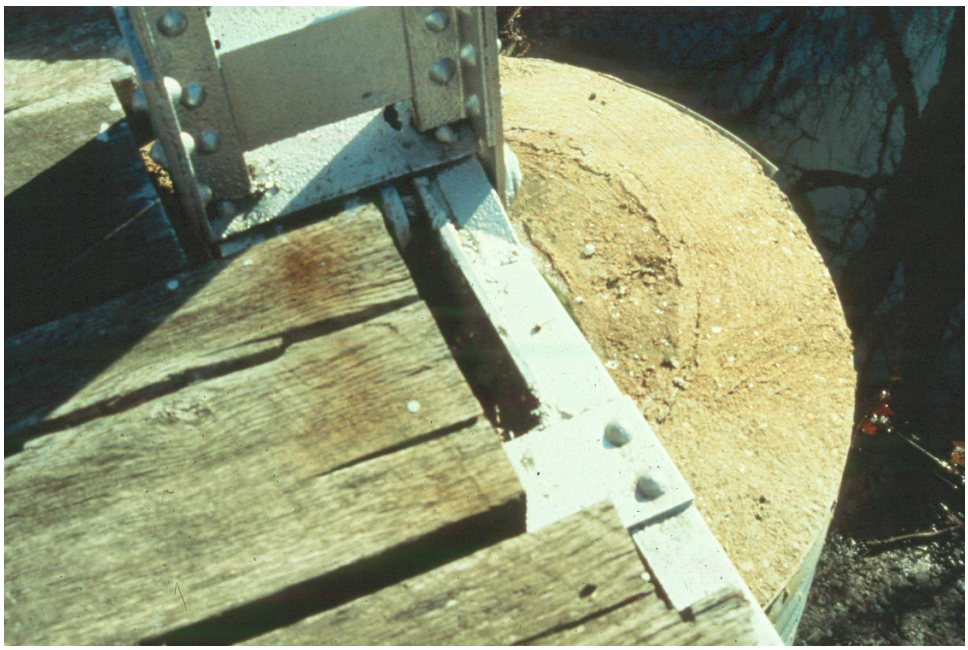

Figure 7.1.9 Bearing and Shear Area on a Timber Deck

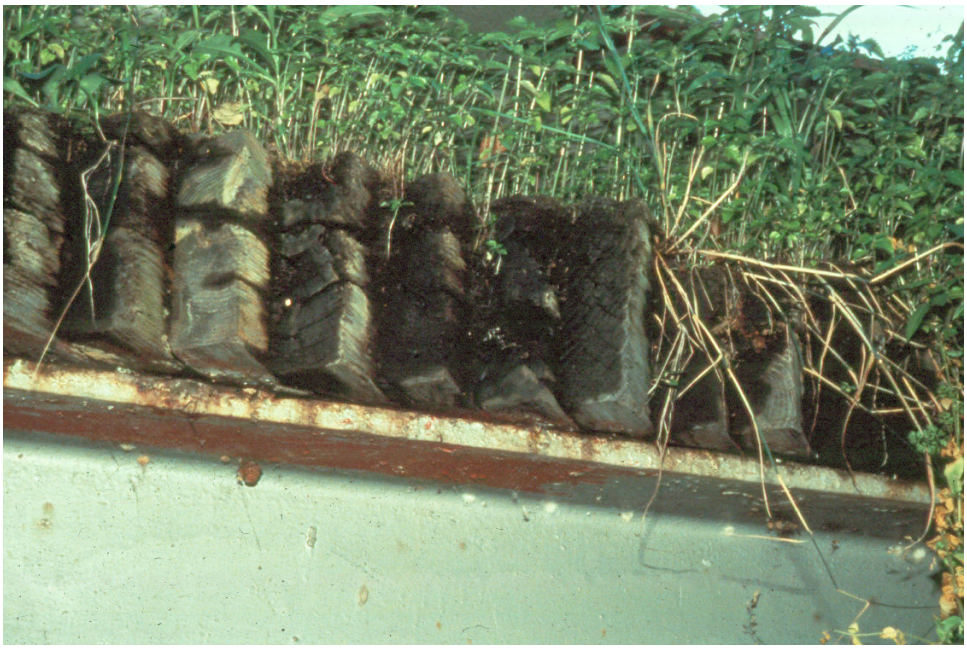

Figure 7.1.10 Edge of Deck Exposed to Drainage, Resulting in Plant Growth

Figure 7.1.11 Broken Prestressing Anchors

7.1.7 Evaluation

State and Federal rating guideline systems have been developed to aid in the inspection of all bridge members, including timber decks. The two major rating guideline systems currently in use are the FHWA's *Recording and Coding Guide for the Structural Inventory and Appraisal of the Nation's Bridges* used for the National Bridge Inventory (NBI) component condition rating method and the *AASHTO Guide Manual for Bridge Element Inspection* used for element level condition state assessment.

NBI Component Condition Rating Guidelines

Using NBI component condition rating guidelines, a one-digit code on the Federal Structure Inventory and Appraisal (SI&A) sheet indicates the condition of the deck. Component condition rating codes range from 9 to 0, where 9 is the best rating possible. See Topic 4.2 (Item 58) for additional details about the NBI component condition rating guidelines.

Consider previous inspection data along with current inspection findings to determine the correct component condition rating.

Element Level Condition State Assessment

In an element level condition state assessment of a timber deck, possible AASHTO National Bridge Elements (NBEs) and Bridge Management Elements (BMEs) are:

NBE No.	Description
31	Timber Deck
54	Timber Slab

BME No.	Description
510	Wearing Surfaces
520	Deck/Slab Protection Systems

The unit quantity for these elements is square feet. The total area is distributed among the four available condition states depending on the extent and severity of the deficiency. The sum of all the condition states equals the total quantity of the National Bridge Element or Bridge Management Element. Condition State 1 is the best possible rating. See the *AASHTO Guide Manual for Bridge Element Inspection* for condition state descriptions.

For the purposes of this manual, a deck is supported by a superstructure and a slab is supported by substructure units.

The following Defect Flags are applicable in the evaluation of timber decks:

Deflect Flag No.	Description
366	Deck Traffic Impact

See the AASHTO *Guide Manual for Bridge Element Inspection* for the application of Defect Flags.

Table of Contents

Chapter 7
Inspection and Evaluation of Bridge Decks and Areas Adjacent to Bridge Decks

7.2 Concrete Decks 7.2.1

7.2.1 Introduction 7.2.1

7.2.2 Design Characteristics 7.2.1
Conventionally Reinforced Cast-in-Place 7.2.1
Precast Conventionally Reinforced 7.2.2
Precast Prestressed 7.2.2
Precast Prestressed Deck Panels with Cast-in-Place Topping 7.2.2
Composite Action 7.2.3
Non-Composite Action 7.2.3
Steel Reinforcement 7.2.5

7.2.3 Wearing Surfaces 7.2.6
Concrete 7.2.6
Bituminous 7.2.7
Epoxy Polymers 7.2.8

7.2.4 Protective Systems 7.2.8
Sealants 7.2.8
Epoxy Coated Reinforcement Bars 7.2.8
Galvanized Reinforcement Bars 7.2.8
Stainless Steel Reinforcement Bars 7.2.8
Fiberglass Reinforcement Polymer (FRP) Bars 7.2.9
Cathodic Protection of Reinforcement Bars 7.2.9
Waterproofing Membrane 7.2.10

7.2.5 Overview of Common Deficiencies 7.2.11

7.2.6 Inspection Methods and Locations 7.2.12
Methods 7.2.12
Visual 7.2.12
Physical 7.2.12
Advanced Inspection Methods 7.2.13
Locations 7.2.13

7.2.7 Evaluation 7.2.16
NBI Component Condition Rating Guidelines 7.2.16
Element Level Condition State Assessment 7.2.16

This page intentionally left blank

Topic 7.2 Concrete Decks

7.2.1 Introduction

The most common bridge deck material is concrete. The physical properties of concrete permit placing in various shapes and sizes, providing the bridge designer and the bridge builder with a variety of construction methods. This topic presents various aspects of concrete bridge decks and related bridge inspection issues.

7.2.2 Design Characteristics

The role of a concrete bridge deck is to provide a smooth riding surface for motorists, divert runoff water, distribute traffic and deck weight loads to the superstructure, and act compositely or non-compositely with the superstructure. Increased research and technology are providing the bridge deck designer with a variety of concrete mix designs, from lightweight concrete to fiber reinforced concrete to high performance concrete, as well as different reinforcement options, to help concrete bridge decks better perform their role.

There are four common types of concrete decks:

- Conventionally reinforced cast-in-place (CIP)
- Precast conventionally reinforced
- Precast prestressed
- Prestressed deck panels with CIP topping

Conventionally Reinforced Cast-in-Place

Concrete decks that are placed at the bridge site are referred to as "cast-in-place" (CIP) decks. Forms are used to contain conventional reinforcing bars and wet concrete so that after curing, the deck components will be in the correct position and shape. "Bar chairs" are used to support conventional reinforcement in the proper location during construction. There are two types of forms used when placing cast-in-place concrete: removable and stay-in-place.

Removable forms are usually wood planking or plywood but can also be fiberglass reinforced plastic. These forms are taken away from the deck after the concrete has cured.

Stay-in-place (SIP) forms are corrugated metal sheets permanently installed between the supporting superstructure members. After the concrete has cured, these forms, as the name indicates, remain in place as permanent, nonworking members of the bridge (see Figure 7.2.1).

Figure 7.2.1 CIP Concrete Deck with Stay-in-Place Forms

Precast Conventionally Reinforced

Precast deck panels are conventionally reinforced concrete panels that are cast and cured somewhere other than on the bridge site. Proper deck elevations are generally accomplished using leveling bolts and a grouting system.

The precast deck panels fit together using match cast keyed construction. After leveling, precast deck panels are attached to the superstructure/floor system. Mechanical clips can be used to connect the deck panels to the superstructure. An alternate method involves leaving block-out holes in the precast panels as an opening for shear connectors. The deck panels are positioned over the shear connectors, and the block-out holes are then filled with concrete or grout.

Precast Prestressed

Precast prestressed decks are also reinforced concrete decks cast and cured away from the bridge site. However, they are reinforced with prestressing steel in addition to some mild reinforcement. The prestressing tendons or bars are tensioned prior to placing the deck (pretensioned) or after the deck is cured (post-tensioned). The tendons are held in position until the deck has sufficiently cured. This creates compressive forces in the deck, which reduce the amount of tension cracking in the cured concrete.

Prestressed Deck Panels with Cast-in-Place Topping

Precast prestressed deck panels can also be used in conjunction with a cast-in-place concrete overlay. Partial depth reinforced precast panels are placed across the beams or stringers and act as forms (see Figure 7.2.2). A cast-in-place layer, which may be reinforced, is then placed which engages both the supporting superstructure members and the precast deck units. The CIP layer provides a jointless top surface for the deck which results in a smoother ride for motorist. After the cast-in-place layer has cured, composite action is achieved with the shear connectors and superstructure.

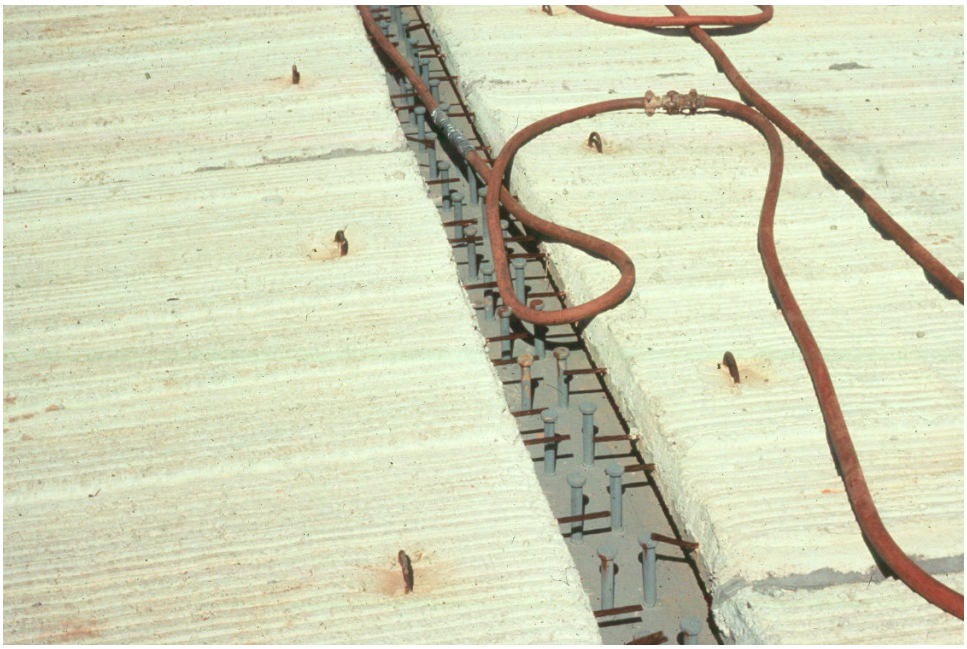

Figure 7.2.2 Precast Deck Panels with Lifting Lugs Evident and Top Beam Flange Exposed (Prior to CIP Topping)

Composite Action

A concrete deck is generally required when composite action is desired in the superstructure (refer to Topic 5.2.32). Composite action is defined as dissimilar materials joined together so they behave as one structural unit. A composite bridge deck structure is one in which the deck acts together structurally with the superstructure to resist the applied loads. An example of composite action is a cast-in-place concrete deck joined to steel or prestressed concrete beams or a steel floor system using shear connectors (see Figures 7.2.3 and 7.2.4). A precast deck can also develop composite action through grout pockets, which engage shear connectors (see Figure 7.2.2). Some examples of shear connectors are studs, spirals, channels, or stirrups. Shear connectors are generally welded to the top flange of steel superstructure members. In prestressed concrete beams, shear connectors are extended portions of stirrups which protrude beyond the top of the beam. Composite action does not occur until the CIP deck is placed and cured or the precast deck grout pockets have been filled and cured.

Non-Composite Action

A non-composite concrete deck is not mechanically attached to the superstructure and does not contribute to the capacity of the superstructure.

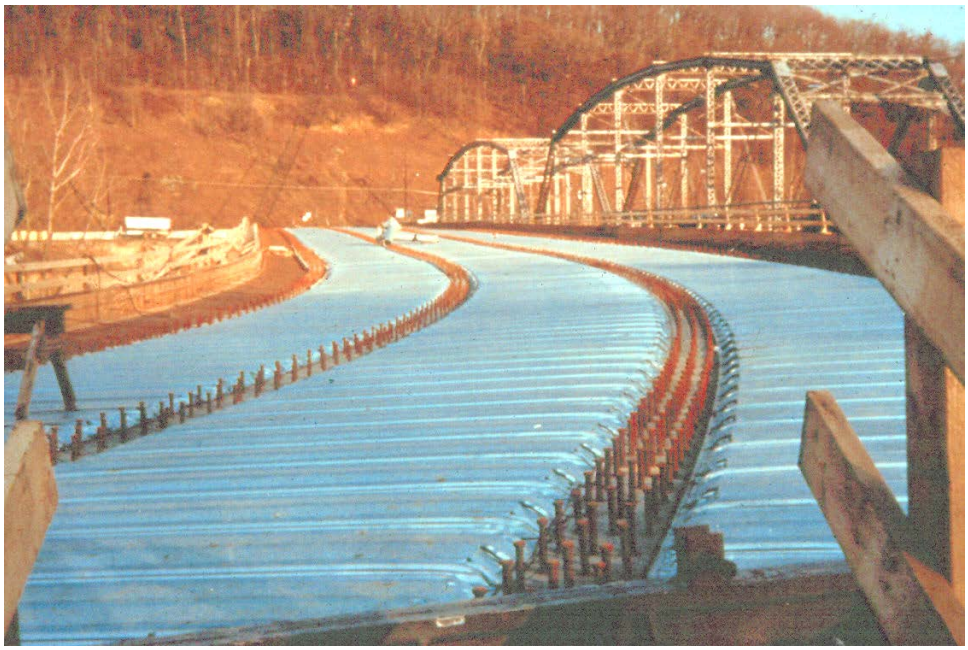

Figure 7.2.3 Shear Connectors Welded to the Top Flange of a Steel Girder for Composite Deck

Figure 7.2.4 Prestressed Concrete Beams with Shear Connectors Protruding for Composite Deck

Steel Reinforcement

Because concrete has relatively little tensile strength, conventional steel reinforcement is used to resist the tensile stresses in the deck. When conventional reinforcement was first used for bridge decks, it was either round or square steel rods with a smooth finish and had a tendency to debond with the surrounding concrete when a tension force was applied. Today, the most common conventional reinforcement is steel deformed reinforcing bars, commonly referred to as "rebars." These bars are basically round in cross section with lugs or deformations rolled into the surface to create a mechanical bond between the reinforcement and the concrete. Lap splices and bar development are dependent on that mechanical bond. A lap splice is the amount of overlap that is needed between two rebars to successfully have the two bars act as one. Mechanical end anchorages or lock devices can also be used to splice rebar. Bar development is the length of embedded rebar needed to develop the design stress and varies based on material properties and bar diameter. When space is limited, a mechanical hook (90° or 180° bend) is placed at the end of a bar to achieve full development.

Although concrete decks could not function efficiently without conventional reinforcement, the corrosion of the reinforcing steel is the primary cause of deck deterioration. Since about 1970, epoxy coatings have been a common method of protecting steel rebars against corrosion. Less common methods of protection include galvanizing and use of stainless steel. Refer to Topic 6.2.4 for detailed explanations on various reinforcement types.

Primary reinforcement carries the tensile stress in a concrete deck and is located on both the top and bottom of the deck. Decks are designed with thickness that shear reinforcement is not normally required. Older, thinner decks utilized bent tensile reinforcement to act as shear reinforcement in areas close to superstructure support. These bent bars are sometimes referred to as ‘crank’ bars. Secondary reinforcement is temperature and shrinkage steel and is placed perpendicular to the primary reinforcement. Additional longitudinal deck reinforcement is generally placed over piers to help resist the negative moments in the composite superstructure.

It is important be able to identify the direction of the primary reinforcement to properly evaluate any cracks in the deck. Primary reinforcement is placed perpendicular to the deck's support points. For example, the support points on a multi-beam bridge and a stringer type floor system are parallel with the direction of traffic. Therefore, the primary deck reinforcement on these deck types is perpendicular to the direction of traffic (see Figure 7.2.8). The support points on a floorbeam-only type floor system are perpendicular with the traffic flow, and the primary deck reinforcement is therefore parallel with the traffic flow. In all cases, the primary reinforcement is closer to the top and bottom concrete surface than secondary reinforcement.

Figure 7.2.5 Spall Showing Deck Reinforcing Steel Perpendicular to Traffic

Primary reinforcement is generally a larger bar size than temperature and shrinkage steel. However, to improve design and construction efficiencies, concrete decks may be reinforced with the same size bar in both the top and bottom rebar mats. Reinforcement top cover is generally 2 to 2-1/2 inches minimum for cast-in-place decks without a wearing surface, and 1 inch minimum for precast decks with a separate wearing surface. Refer to bridge plans, standards or actual field measurements to determine exact location of reinforcement bars.

7.2.3 Wearing Surfaces

Wearing surfaces are placed on top of the deck and protects the deck and provides a smooth riding surface. The wearing surface materials most commonly used on concrete decks are generally either special concrete mixes or bituminous concrete. Wearing surfaces are incorporated in many new deck designs and are also a common repair procedure for decks.

Concrete

There are two categories of concrete wearing surfaces: integral and overlays. An integral concrete wearing surface is cast with the deck, typically adding an extra 1/2 to 1 inch of thickness to the deck. When the wearing surface has deteriorated to the extent that rebar protection is affected, it is milled, leveled and replaced with an overlay.

A concrete overlay wearing surface is cast separately over the previously cast concrete deck. Some concrete wearing surfaces may have transverse grooves cut into them as a means of improving traction and preventing hydroplaning. The grooves can be tined while the concrete is still plastic or they can be diamond-sawed after the concrete has cured. There are various types of concrete overlays in use or being researched at the present time. These include:

- Low slump dense concrete (LSDC)
- Polymer/latex modified concrete (LMC)

- Internally sealed concrete
- Lightweight concrete (LWC)
- Fiber reinforced concrete (FRC)

Low slump dense concrete (LSDC) uses a dense concrete with a very low water-cement ratio (approximately 0.32). LSDC overlays were first used in the early 1960's for patches and overlays on bridges in Iowa and Kansas (hence the common term "Iowa Method"). The original overlays were 1¼ inches thick, but now a 2-inch minimum is specified. This type of overlay is generally used because it cures rapidly and has a low permeability. The low permeability resists chloride penetration, while the fast curing decreases the closure period. Low slump dense concrete overlays are placed mainly in locations where deicing salts are used. Surface cracking is a problem in areas where the freeze/thaw cycle exists. The number of applications of deicing salts also plays a role in the deterioration of LSDC overlays. Higher strength dense concrete has been used in the recent past, and results have shown that LSDC overlaid bridge decks will require resurfacing after about 25 years of service, regardless of the concrete deck deterioration caused by steel reinforcement corrosion.

Polymer/latex modified concrete overlay involves the incorporation of polymer emulsions into the fresh concrete. The emulsions have been polymerized prior to being added to the mixture. This is commonly known as latex-modified concrete (LMC). LMC is conventional Portland cement concrete with the addition of approximately 15 percent latex solids by weight of the cement. The typical thickness of 1¼ inches is used for LMC.

The primary difference between the LSDC and the LMC overlays is that low slump concrete uses inexpensive materials but is difficult to place and requires special finishing equipment. Conversely, latex-modified concrete utilizes expensive materials but requires less manpower and is placed by conventional equipment. The performance of LMC has generally been satisfactory, although in some cases, extensive map cracking and debonding have been reported. The causes for this are likely the improper application of the curing method, application under high temperature, or shrinkage due to high slump.

Lightweight concrete (LWC) overlays use concrete with lightweight aggregates and a higher entrained air content. This produces an overlay of approximately 80 to 100 pcf compared to 140 to 150 pcf for conventional concrete. This type of overlay has a reduced dead load compared to a traditional concrete overlay. Lightweight concrete is also used for cast-in-place and precast decks.

Fiber reinforced concrete (FRC) overlays using Portland cement and metallic, fiberglass, plastic, or natural fibers are becoming a popular solution to bridge deck surface problems. This type of reinforcement strengthens the tension properties in the concrete, and tests have shown that FRC overlays can stop a deck crack from propagating through the overlay. This type of overlay is gaining acceptance but is still in the research stage.

Bituminous

The most common overlay material for concrete decks is bituminous concrete (commonly referred to as ‘asphalt’). Bituminous overlays generally range from 1 ½ inch up to 3 inches thick, depending on the severity of the repair and the load capacity of the superstructure. When bituminous is placed on concrete, a

waterproof membrane may be applied first to protect the reinforced concrete from the adverse effects of water borne deicing chemicals, which pass through the permeable bituminous layer. Not all attempts at providing a waterproof membrane are successful.

Epoxy Polymers

Epoxy polymer overlays on concrete decks help prevent the infusion of the chloride ions and can help provide skid resistance and protected system for 15 to 30 years, depending on the volume of traffic.

7.2.4 Protective Systems

With increasing research, the uses of protective systems are increasing the life of reinforced concrete bridge decks. Most reinforced concrete bridge decks need repair years before the other components of the bridge structure. Therefore protecting the bridge deck from contamination and deterioration is gaining importance.

Sealants

Reinforced concrete deck sealants are used to stop chlorides from contaminating the conventional steel and prestressed reinforcement. These sealants are generally pore sealers or hydrophobing agents, and their performance is affected by environmental conditions, traffic wear, penetration depth of the sealer, and ultraviolet light.

Boiled linseed oil is a popular sealant that is used to cure or seal a concrete deck. It is applied after the concrete gains the appropriate amount of strength. This material resists water and the effects of deicing agents.

Elastomeric membranes are another approach when sealing a concrete bridge deck. This type of sealant is mixed on site and cures to a seamless viscous waterproof membrane. It is generally applied prior to placing an bituminous overlay.

Epoxy Coated Reinforcement Bars

Conventional steel reinforcement corrosion causes detrimental effects on concrete decks. An epoxy coating is often used on all conventional steel deck reinforcement to prevent corrosion. The epoxy coating is resistant to chemicals, water, and atmospheric moisture. Epoxies utilize an epoxy polymer binder that forms a tough, resilient film upon drying and curing. Drying is by solvent evaporation, while curing entails a chemical reaction between the coating components.

Galvanized Reinforcement Bars

Another method of protecting conventional steel reinforcement is by galvanizing the steel. Galvanizing slows down the corrosion process and lengthens the life of the conventional reinforced concrete deck. Galvanizing is achieved by coating the bare conventional steel reinforcement with zinc. The two unlike metals form an electrical current between them, and one metal virtually stops its corrosion process while the other's accelerates due to the electrical current. In this situation, the steel stops corroding while the zinc has accelerated corrosion.

Stainless Steel Reinforcement Bars

The corrosion process is negligible when stainless steel reinforcement is used. Solid stainless steel reinforcement bars can be used due to its corrosion resistance being greater than conventional reinforcement with an estimated service life of 100 years. Stainless steel coating can be used on conventional reinforcement to which will protect the reinforcement from water and air and quickly reform if the surface is scratched.

Fiberglass Reinforced Polymer (FRP) bars

Fiberglass reinforced polymer (FRP) bars for concrete reinforcement has an advantage over conventional reinforcement due its resistance to corrosion. They are also lightweight, weighing about one-quarter the weight of an equivalent size steel bar. Corrosion resistance and weight are offset by lower allowable tensile strengths.

Cathodic Protection of Reinforcement Bars

Cathodic protection is sometimes used on decks with black bare steel reinforcement (not epoxy coated). Conventional steel reinforcement corrosion can also be slowed down by cathodic protection. Corrosion of conventional steel reinforcing bars in concrete occurs by an electrical process in a moist environment at the steel surface. During corrosion, a voltage difference (less than 1 volt) develops between rebars or between different areas on the same rebar. Electrons from the iron in the rebar are repelled by the negative anode area of the rebar and attracted to the positive cathode area. This electron flow constitutes an electrical current that is necessary for the corrosion process. Corrosion occurs only at the anode, where the electrons from the iron are given up.

By cathodic protection, this electrical current is reversed, slowing or stopping corrosion. By the impressed current method, an electrical DC rectifier supplies electrical current from local electrical power lines to a separate anode embedded in the concrete. The anode is usually a wire mesh embedded just under the concrete surface. Another type of anode consists of an electrically conductive coating applied to the concrete surface. The wires from the rectifier are embedded in the coating at regular intervals (see Figure 7.2.6).

When the impressed current enters the mesh or coating anode, the voltage on the rebars is reversed, turning the entire rebar network into a giant cathode. Since natural corrosion occurs only at the anode, the rebars are protected.

The natural corrosion process is allowed to proceed by electrons leaving the iron atoms in the anode. With impressed current cathodic protection, however, the electrons are supplied from an external source, the DC rectifier (see figure 7.2.6). Thus, the artificial anode mesh or coating is also spared from corrosion.

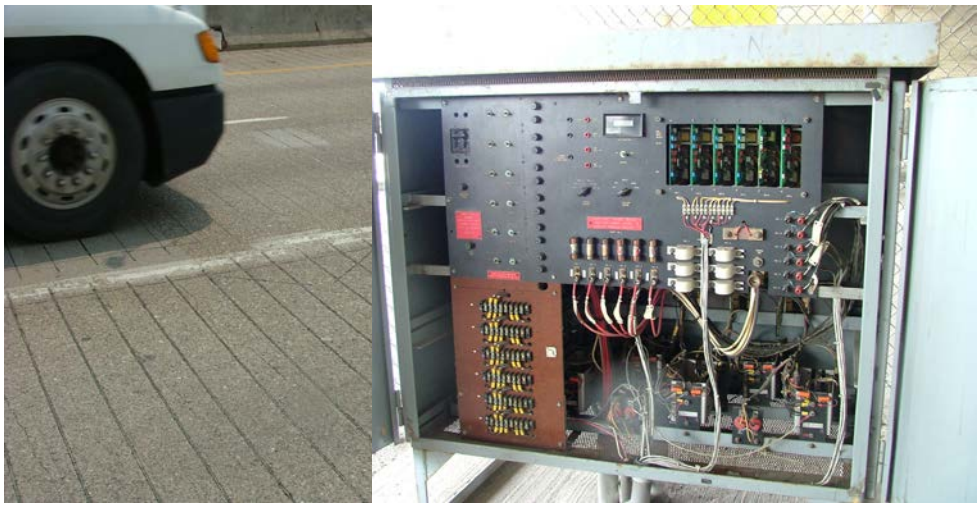

Figure 7.2.6 Cathodic Protection: Deck Wires Connected to Direct Current Rectifier

Waterproofing Membrane

There are two types of bridge deck waterproofing membrane systems.

- Self-adhering membrane – is a high strength polyester reinforced membrane with a rubber/bitumen compound, which is cold applied.
- Liquid waterproofing membrane – is a two-component compound, which is simply mixed on site to produce a viscous seamless rubber/bitumen liquid that cures to an elastomeric waterproof membrane. This membrane type is applied through 'spraying or painting' the material to the deck.

A layer of bituminous base and wearing course is then applied over the membrane for both these methods. These systems are used to retard reflective cracking and provide waterproofing.

7.2.5 Overview of Common Deficiencies

Common concrete deck deficiencies are listed below. Refer to Topic 6.2 for a detailed description of these deficiencies:

- Cracking (flexure, shear, temperature, shrinkage, mass concrete)
- Scaling
- Delamination
- Spalling
- Chloride contamination
- Freeze-thaw
- Surface breakdown
- Pore pressure
- Efflorescence
- Alkali Silica Reactivity (ASR)
- Ettringite formation
- Honeycombs
- Pop-outs
- Wear
- Collision damage
- Abrasion
- Overload damage
- Reinforcing steel corrosion
- Prestressed concrete deterioration

7.2.6 Inspection Methods and Locations

Methods

Visual

The inspection of concrete decks for surface cracks, spalls, and other deficiencies is primarily a visual activity. All surfaces of the concrete deck will receive a close visual inspection.

Physical

Hammers can be used to detect areas of delamination. A delaminated area will have a distinctive hollow “clacking” sound when tapped with a hammer or revealed with a chain drag. A hammer hitting sound concrete will result in a solid "pinging" type sound.

The physical examination of a deck with a hammer can be a tedious operation. In most cases, a chain drag is used. A chain drag is made of several sections of chain attached to pipe that has a handle attached to it. It will be dragged across a deck and make a note of the resonating sounds. A chain drag can usually cover about a 3-feet wide section of deck at a time (see Figure 7.2.7). Evaluate suspect areas with a hammer to determine the exact dimensions of the delaminated area.

Figure 7.2.7 Sounding for Delaminated Areas of Concrete

Many of the problems associated with concrete bridge decks are caused by corrosion of the reinforcement. When the deficiency of a concrete deck progresses to the point of needing rehabilitation, an in-depth inspection of the deck is required to determine the extent, cause, and possible solution to the problem. Several techniques and methods are available.

Advanced Inspection Methods

Several advanced methods are available for concrete inspection. Nondestructive methods, described in Topic 15.2.2, include:

- Acoustic wave sonic/ultrasonic velocity measurements
- Electrical methods
- Delamination detection machinery
- Ground-penetrating radar
- Electromagnetic methods
- Pulse Velocity
- Flat jack testing
- Impact-echo testing
- Infrared thermography
- Laser ultrasonic testing
- Magnetic field disturbance
- Neutron probe for detection of chlorides
- Nuclear methods
- Pachometer
- Rebound and penetration methods
- Ultrasonic testing
- Smart concrete

Other methods, described in Topic 15.2.3, include:

- Carbonation
- Concrete permeability
- Concrete strength
- Endoscopes and video scopes
- Moisture content
- Petrographic examination
- Reinforcing steel strength
- Chloride test
- Matrix analysis
- ASR evaluation

If it is deemed necessary, core samples can be taken from the deck and sent to a laboratory to determine the extent of any chloride contamination.

Locations

Both the top and bottom surfaces of concrete decks will be inspected for deficiencies listed in Topic 7.2.5. In all instances, it is helpful to have the previous inspection report available so that the progression of any deficiency can be noted. This provides a more meaningful inspection by helping the inspector determine the rate of deficiency.

For concrete deck inspections, special attention will be given to the following locations:

- **Areas exposed to traffic** – examine for surface texture and wheel ruts due to wear. Check cross-slopes for uniformity. Verify that repairs are acting as intended.
- **Areas exposed to drainage** – investigate for ponding water, scaling, delamination, and spalls.
- **Bearing and shear areas** where the concrete deck is supported – check for cracks, spalls and crushing near supports.
- **Shear key joints** between precast deck panels – inspect for leaking joints, cracks, and other signs of independent panel action.
- **Anchorage zones** of precast deck tie rods – check for deteriorating grout pockets or loose lock-off devices. If a previous inspection report is available, this will be used to see if the progression of any deficiency can be noted.
- **Top of the deck** over the supports – examine for flexure cracks which would be perpendicular to the primary tension reinforcement.
- **Bottom of the deck** between the supports – check for flexure cracks which would be perpendicular to the primary tension reinforcement (see Figure 7.2.8).
- **Bituminous overlays** – if present, they will be inspected. Cracks, delaminations, and spalls are to be noted. Often water penetrates overlays and then penetrates into the structural deck. Bituminous overlays prevent visual inspection of the top surface of the deck. The wearing surface does not affect the evaluation of the structural deck.
- **Stay-in-place forms** – investigate for deterioration and corrosion of the forms, often indicating contamination of the concrete deck; these forms can retain moisture and chlorides which have penetrated full depth cracks in the deck (see Figure 7.2.9).
- **Cathodic protection** – during the bridge inspection, check that all visible electrical connections and wiring from the rectifier to the concrete structure are intact. Check the rectifiers after an electrical storm. Nearby lightning has been known to 'trip the circuits' and to inactivate the system. If cathodic protection appears not to be working, notify maintenance personnel. Some agencies that use cathodic protection have specialized inspection/maintenance crews for these types of bridge decks.
- **Areas previously repaired** – investigate for deterioration of any patches that were previous noted. Determine if the repairs are in place, and they are functioning properly.
- **Areas of closure pours** – investigate for signs of any delamination or spalling around the area of a closure pour
- **Adjacent to joints** - investigate for signs of delamination or spalling in general area around the joint.
- **Fire damage** – check for any damage caused by fire

Figure 7.2.8 Underside View of Longitudinal Deck Crack

Figure 7.2.9 Deteriorated Stay-in-Place Form

7.2.7 Evaluation

State and Federal rating guideline systems have been developed to aid in the inspection of concrete decks. The two major rating guideline systems currently in use are the FHWA's *Recording and Coding Guide for the Structural Inventory and Appraisal of the Nation's Bridges* used for the National Bridge Inventory (NBI) component condition rating method and the *AASHTO Guide Manual for Bridge Element Inspection* used for element level condition state assessment.

NBI Component Condition Rating Guidelines

Using NBI component condition rating guidelines, a one-digit code on the Federal Structure Inventory and Appraisal (SI&A) sheet indicates the condition of the deck. Component condition rating codes range from 9 to 0, where 9 is the best rating possible. See Topic 4.2 (Item 58) for additional details about the NBI component condition rating guidelines.

Consider previous inspection data along with current inspection findings to determine the correct component condition rating.

Element Level Condition State Assessment

In an element level condition state assessment of a concrete deck, possible AASHTO National Bridge Elements (NBEs) and Bridge Management Elements (BMEs) are:

NBE No.	Description
12	Reinforced Concrete Deck
38	Reinforced Concrete Slab

BME No.	Description
510	Wearing Surfaces
520	Deck/Slab Protection
521	Concrete Protective Coating

The unit quantity for these elements is square feet. The total area is distributed among the four available condition states depending on the extent and severity of the deficiency. The sum of all the condition states equals the total quantity of the National Bridge Element or Bridge Management Element. Condition State 1 is the best possible rating. See the *AASHTO Guide Manual for Bridge Element Inspection* for condition state descriptions.

For the purpose of this manual, a deck is supported by a superstructure, and a slab is supported by substructure units.

The following Defect Flags are applicable in the evaluation of steel decks:

Defect Flag No.	Description
358	Concrete Cracking
359	Concrete Efflorescence
366	Deck Traffic Impact

See the AASHTO *Guide Manual for Bridge Element Inspection* for the application of Defect Flags.

Table of Contents

Chapter 7
Inspection and Evaluation of Bridge Decks and Areas Adjacent to Bridge Decks

7.3 Fiber Reinforced Polymer (FRP) Decks 7.3.1

7.3.1 Introduction 7.3.1

7.3.2 Design Characteristics 7.3.1
Honeycomb Sandwich 7.3.1
Solid Core Sandwich 7.3.2
Hollow Core Sandwich 7.3.2

7.3.3 Wearing Surfaces 7.3.2
Bituminous 7.3.2
Epoxy Polymers 7.3.2

7.3.4 Overview of Common Deficiencies 7.3.3

7.3.5 Inspection Methods and Locations 7.3.3
Methods 7.3.3
Visual 7.3.3
Physical 7.3.4
Advanced Inspection Methods 7.3.4
Locations 7.3.5

7.3.6 Evaluation 7.3.7
NBI Component Condition Rating Guidelines 7.3.7
Element Level Condition State Assessment 7.3.7

This page intentionally left blank

Topic 7.3 Fiber Reinforced Polymer (FRP) Decks

7.3.1 Introduction

Fiber Reinforced Polymer (FRP) is a modern bridge material that is becoming increasingly popular throughout the transportation community. First used in the United States in the early 1990s, FRP has been explored both in the repair and retrofit of existing structures as well as new bridge construction.

Figure 7.3.1 Fiber Reinforced Polymer (FRP) Deck

7.3.2 Design Characteristics

Modern FRP composite decks are typically made of pultruded sections (e.g., honeycomb shaped, trapezoidal, or double-web I-beams). Slabs are often made using a vacuum assisted process.

There are three types of FRP composite decks:

- Honeycomb sandwich
- Solid core sandwich
- Hollow core sandwich

Honeycomb Sandwich

Honeycomb sandwich construction will provide considerable flexibility in the depth of the deck. However, the hand lay-up process will require a large amount of attention to quality control when bonding the top and bottom facesheets to the core (see Figure 7.3.2).

Figure 7.3.2 Honeycomb sandwich configuration (Photograph from NCHRP Report 564 – Field Inspection of In-Service FRP Bridge Decks)

Solid Core Sandwich

Solid core sandwich decks contain foam or other fillers at the core. This type of decks is manufactured by using a process called Vacuum-Assisted Resin-Transfer Molding (VARTM). (see Figure 7.3.3)

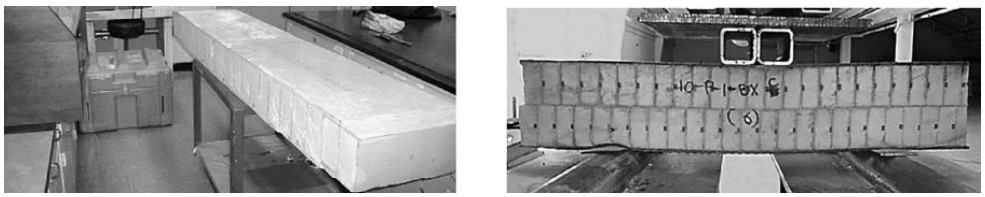

Figure 7.3.3 Solid core sandwich configuration (Photograph from NCHRP Report 564 – Field Inspection of In-Service FRP Bridge Decks)

Hollow Core Sandwich

Hollow core sandwich decks consist of deck sections that contain pultruded shapes that are fabricated together. (see Figure 7.3.4)

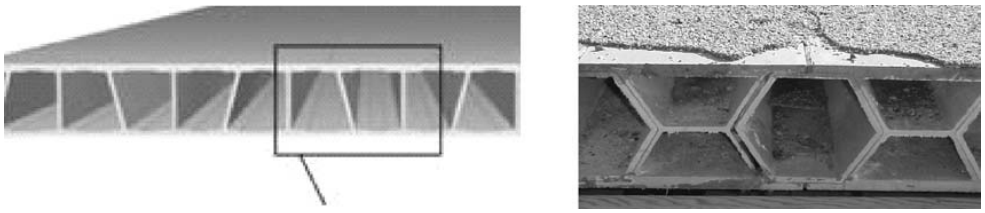

Figure 7.3.4 Hollow core sandwich configuration (Photograph from NCHRP Report 564 – Field Inspection of In-Service FRP Bridge Decks)

7.3.3 Wearing Surfaces

FRP decks require an overlay due to the low skid resistance of the materials. For both deck and slabs, Thin polymer-concrete overlays are often used for the wearing surface. Bituminous overlays have also been used.

Bituminous

The most common overlay material for FRP decks is bituminous concrete commonly referred to as asphalt. Asphalt overlays generally range from 1 ½ inch up to 3 inches thick. When asphalt is placed on FRP, a waterproof membrane may be applied first to protect the FRP from the adverse effects of water borne deicing chemicals, which pass through the permeable bituminous concrete layer. Not all attempts at providing a waterproof membrane are completely successful.

Epoxy Polymers

Epoxy polymer overlays have been used to protect FRP decks. They help prevent the infusion of the chloride ions and can help provide skid resistance for 15 to 30 years, depending on the volume of traffic.

7.3.4 Overview of Common Deficiencies

Common FRP deck deficiencies are listed below. Refer to Topic 6.6 for a detailed description of these deficiencies:

- Blistering
- Voids and Delaminations
- Discoloration
- Wrinkling
- Fiber exposure
- Scratches
- Cracking

7.3.5 Inspection Methods and Locations

Methods

Visual

The visual inspection of FRP decks for surface deficiencies is the primary inspection method. Even though it may be easy to detect blistering and debonding, it is often helpful to incorporate a static or dynamic load (e.g. a truck) to assist in detecting a crack or any vertical deck movement while performing a visual inspection. (see Figure 7.3.5)

Figure 7.3.5 Use of Truck for Visual Inspection of FRP Deck

Physical

Tap testing is the most common method for visual inspections for fiber reinforced polymers. This method traditionally uses large coins or hammer taps to detect changes in frequency associated with areas of delamination or debonding.

If a physical inspection is performed in a noisy area, an electronic tapping device may be used (see Figure 7.3.6). However, the traditional tap test is preferred over the electronic method due to less time required to perform the traditional test and the ineffectiveness of an electronic tap test for certain deck sections, such as sections with varying thicknesses.

Figure 7.3.6 Electronic Tap Testing Device

Advanced Inspection Methods

Several advanced methods are available for FRP inspection. Nondestructive methods, described in Topic 6.6.5, include:

- Thermal testing
- Acoustic emission testing
- Ultrasonic testing
- Laser based ultrasound testing
- Radiography
- Reverse-geometry digital X-ray
- Modal analysis
- Load testing

Locations

Both the top and bottom surfaces of FRP decks should be inspected for any blistering, delaminations, discoloration, wrinkling, fiber exposure, scratches or cracking. In all instances, it is helpful to have the previous inspection report available so that the progression of any deficiency can be noted. This provides a more meaningful inspection. Refer to Topic 6.6 for a detailed description of FRP deficiencies.

For FRP deck inspections, special attention should be given to the following locations:

- **Deck panel splice joints** – check for reflective cracking or oozing of joint material which may indicate movement or improper fitment between panels (see Figure 7.3.7)
- **Deck panel butt joints** – where joints are left exposed on the deck underside, measure the gap between panels
- **Vicinity of joints** – investigate for signs of delamination or spalling in general area around the joint. Tap tests should be performed to detect possible delamination
- **Areas exposed to traffic** – examine for surface texture and wheel ruts due to wear
- **Areas exposed to drainage** – investigate for ponding water and delamination
- **Top of deck** – at the expansion joints, check for signs of buckling, misalignment, differential vertical or horizontal movement
- **Underside of deck** – near support beams or abutments, inspect for discoloration, signs of flow, cracks, or other signs of distress (see Figure 7.3.8)
- **Haunch areas** – inspect for separation between deck and haunch or supporting superstructure component and measure distance. Also note any cracking of haunch grout material
- **Deck support areas** – perform tap tests near supports to check for delamination
- **Connections** – check all clip-type connections (see Figure 7.3.9) for tightness, soundness, scratches, abrasion, signs of movement, or any cracks in FRP from bearing against bolt for clip connection

Figure 7.3.7 Deck expansion joint

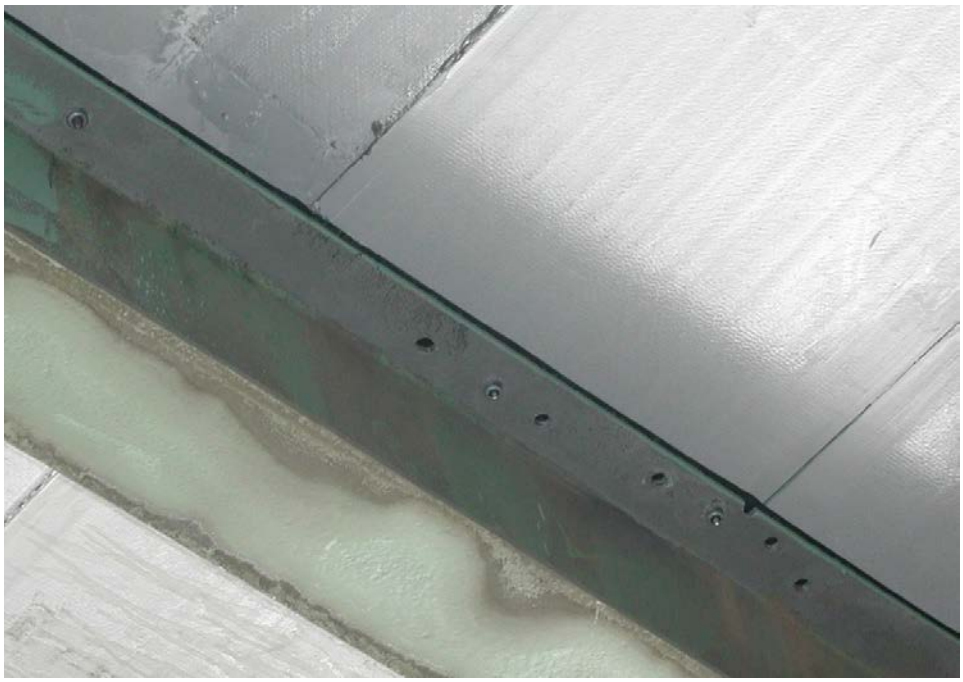

Figure 7.3.8 FRP Deck underside near superstructure beam

Figure 7.3.9 Clip-type connection Between FRP Deck and Steel Superstructure

7.3.6 Evaluation

State and Federal rating guideline systems have been developed to aid in the inspection of FRP decks. The two major rating guideline systems currently in use are the FHWA's *Recording and Coding Guide for the Structural Inventory and Appraisal of the Nation's Bridges* used for the National Bridge Inventory (NBI) component condition rating method and the *AASHTO Guide Manual for Bridge Element Inspection* used for element level condition state assessment.

NBI Component Condition Rating Guidelines

Using NBI component condition rating guidelines, a one-digit code on the Federal Structure Inventory and Appraisal (SI&A) sheet indicates the condition of the deck. Component condition rating codes range from 9 to 0, where 9 is the best rating possible. See Topic 4.2 (Item 58) for additional details about the NBI component condition rating guidelines. Since the FHWA *Coding Guide* was published in 1995 when FRP was not prevalent, NCHRP has provided a supplement to the NBI component condition rating guidelines (see Figure 7.3.10).

Consider previous inspection data along with current inspection findings to determine the correct component condition rating.

Element Level Condition State Assessment

In an element level condition state assessment of a fiber reinforced polymer deck, there are currently no AASHTO National Bridge Elements (NBEs) for FRP decks.

Possible AASHTO Bridge Management Elements (BME) are:

BME No.	Description
510	Wearing Surface
520	Deck/Slab Protective Systems

The unit quantity for these elements is square feet. The total area is distributed among the four available condition states depending on the extent and severity of the deficiency. The sum of all condition states equals the total quantity of the Bridge Management Element. Condition State 1 is the best possible rating. See the *AASHTO Guide Manual for Bridge Element Inspection* for condition state descriptions.

For the purpose of this manual, a deck is supported by a superstructure, and a slab is supported by substructure units.

The following Defect Flags are applicable for fiber reinforced polymer decks:

Defect Flag No.	**Description**
366	Deck Traffic Impact

See the AASHTO *Guide Manual for Bridge Element Inspection* for the application of Defect Flags.

Rating Code	Condition	Description
9	Excellent	Excellent condition, typically new construction.
8	Very Good	No significant problems noted.
7	Good	Minor surface damage in the form of hairline cracks in resin and scratches with no delamination evident on the deck surfaces or underneath.
6	Satisfactory	Minor damages in the form of shallow cracks in resin, scratches, blistering, abrasion and small delaminations over less than 2% of surface area total. Fibers are not exposed, ruptured, or buckled at the surface damage locations. Delamination smaller in every dimension than 4 in. and away from structural details or located such that structural function will not be impaired.
5	Fair	Damage in the form of shallow cracks in resin, scratches, blistering, abrasion, and small delamination extends over 2% to 10% of surface area total. Fibers exposed but not ruptured, buckled, or debonded at the surface damage locations. Delamination smaller in every dimension than 8 in. and located away from structural details or located not to have structural effects. Deck will function as designed.
4	Poor	Surface damage in the form of cracks in resin, scratches, blistering, abrasion, and delamination extends over 10% to 25% of area total. Fibers in the cracks exposed but not debonded, buckled, or ruptured at the surface damage locations. Delamination smaller in every dimension than 8 in. but near structural details or located to have structural effects. Deck will function as designed, but functionality may be impaired without repairs.
3	Serious	Surface damage in the form of deep cracks in resin, scratches, blistering, abrasion, and delamination extends over more than 25% of area total. Fibers are visibly exposed and debonded, but not ruptured or buckled at the surface damage locations. Delamination smaller in every dimension than 14 in. Structural analysis may be necessary to determine whether the deck can continue to function without restricted loading.
2	Critical	Fibers are exposed, debonded, and ruptured, or buckled at the surface damage locations. Delamination larger in any dimension than 24 in. Unless closely monitored or posted for reduced loads, closing the bridge may be necessary until corrective action is taken.
1	Imminent Failure	Major deterioration or damage present; large delaminations, cracks or voids, punctures, major fiber rupture, or buckling through cracks perpendicular to the FRP panel span, sag, or dislocation visible; large, and inconsistent deflections under traffic observed. Bridge is closed to traffic but corrective action may put back in service.
0	Failed	Out of service - beyond corrective action / deck must be replaced.

Figure 7.3.10 Condition rating of FRP deck structure (Source: NCHRP Report 564: *Field Inspection of In-Service FRP Bridge Decks: Inspection Manual*: Table 7.1.2-1)

This page intentionally left blank

Table of Contents

Chapter 7
Inspection and Evaluation of Bridge Decks and Areas Adjacent to Bridge Decks

7.4 Steel Decks 7.4.1

7.4.1 Introduction 7.4.1

7.4.2 Design Characteristics 7.4.1
- Orthotropic Decks 7.4.1
- Buckle Plate Decks 7.4.2
- Corrugated Steel Decks 7.4.2
- Grid Decks 7.4.3
  - Welded Grid Decks 7.4.3
  - Riveted Grid Decks 7.4.4
  - Concrete Filled Decks 7.4.5
  - Exodermic Decks 7.4.7

7.4.3 Wearing Surfaces 7.4.7
- Serrated Steel 7.4.7
- Concrete 7.4.7
- Bituminous 7.4.8
- Gravel 7.4.8

7.4.4 Protective Systems 7.4.8
- Paints 7.4.8
- Galvanizing 7.4.8
- Metalizing 7.4.8
- Overlay 7.4.9
- Epoxy Coating 7.4.9

7.4.5 Overview of Common Deficiencies 7.4.9

7.4.6 Inspection Methods and Locations 7.4.9
- Methods 7.4.9
  - Visual 7.4.9
  - Physical 7.4.9
  - Advanced Inspection Methods 7.4.10
- Locations 7.4.10

7.4.7 Evaluation 7.4.11
- NBI Component Condition Rating Guidelines 7.4.11
- Element Level Condition State Assessment 7.4.11

This page intentionally left blank.

Topic 7.4 Steel Decks

7.4.1 Introduction

Steel decks are found on many older bridges and moveable bridges. Their popularity grew until concrete decks were introduced. Today, steel bridge decks have various advantages and disadvantages, as presented in Topic 7.4.2.

7.4.2 Design Characteristics

Steel bridge decks are mainly used when weight is a major factor. The weight of a steel deck per unit area is less than that of concrete. This weight reduction of the deck means the superstructure and substructure can carry more live load. For open grid decks, the trade-off of this weight savings is that water is permitted to pass through the deck, which deteriorates the superstructure, bearings and substructure. Steel grid decks can be filled or partially with concrete to prevent the water from passing through. The four basic types of steel decks are:

- Orthotropic decks
- Buckle plate decks
- Corrugated steel decks
- Grid decks

Orthotropic Decks

An orthotropic deck consists of a flat, thin steel plate stiffened by a series of closely spaced longitudinal ribs at right angles to their supports. The deck acts integrally with the steel superstructure. An orthotropic deck becomes the top flange of the entire floor system (see Figure 7.4.1).

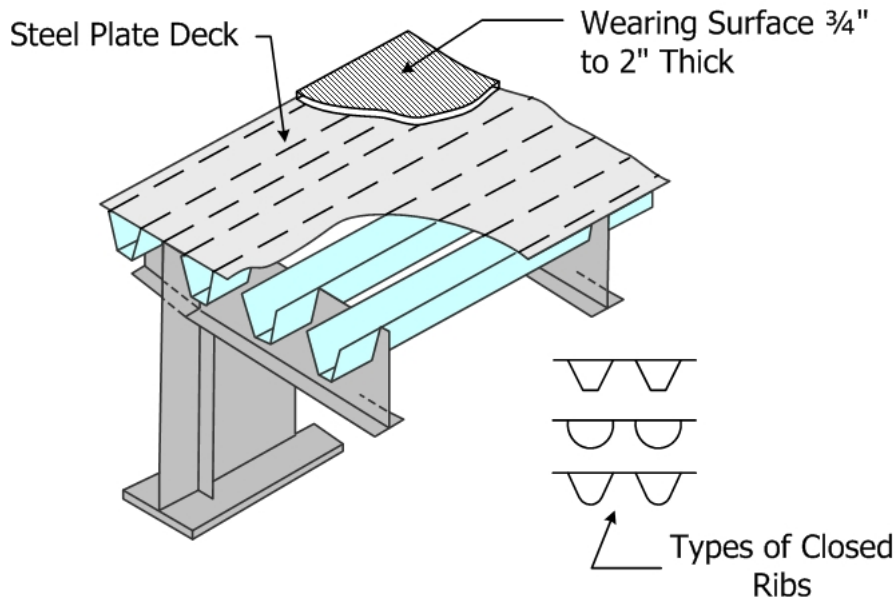

Figure 7.4.1 Orthotropic Bridge Deck

Buckle Plate Decks

Buckle plate decks are found on older bridges. They consist of steel plates attached to the floor system which support a layer of reinforced concrete (see Figure 7.4.2). The plates are concave or "dished" with drain holes in the center. The sides are typically riveted to the superstructure. Buckle plate decks serve as part of the structural deck and as the deck form. They are not being used in current design but many buckle plate decks are still in service.

Figure 7.4.2 Underside View of Buckle Plate Deck

Corrugated Steel Decks

Corrugated steel flooring is popular because of its light weight and high strength. This deck consists of corrugated steel planks covered by a layer of bituminous wearing surface (asphalt) (see Figure 7.4.3). The bituminous wearing surface thickness varies from the centerline of the deck to the edge of the roadway, to achieve proper cross slope. The corrugated flooring spans between the supporting superstructure. Corrugations are smaller than stay-in-place (SIP) forms, but the steel is thicker, ranging from 0.1 inch to 0.18 inch. The steel planks are welded in place to steel superstructure. In the case of timber superstructures, the corrugated flooring is attached by lag bolts. The corrugations are filled with bituminous pavement, and then a wearing surface is applied. There are no reinforcement bars utilized in this deck type.

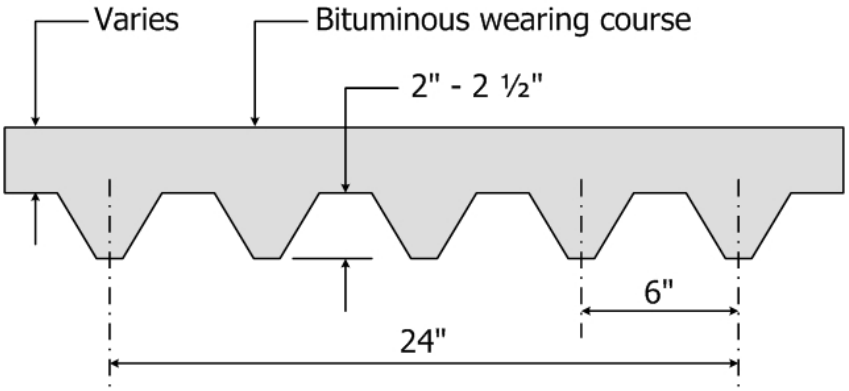

Figure 7.4.3 Corrugated Steel Floor

Grid Decks

Grid decks are the most common type of steel deck because of their light weight and high strength. They are commonly welded, riveted or fitted units, which may be open, filled or partially filled with concrete.

Open decks are lighter than concrete-filled decks, but they are vulnerable to corrosion since they are continually exposed to weather, debris, and traffic. Another disadvantage of open decks is that they allow dirt and debris to fall onto the supporting members. Grid decks are often found on rehabilitated bridges. Their lower weight reduces the dead load on a rehabilitated bridge, and their installation method can reduce the time that the bridge will be closed for repairs.

The four types of grid decks include:

- Welded grid decks
- Riveted grate decks
- Concrete-filled decks
- Exodermic decks

Welded Grid Decks

Welded grid decks have their components welded together. These components consist of bearing bars, cross bars, and supplementary bars (see Figure 7.4.4).

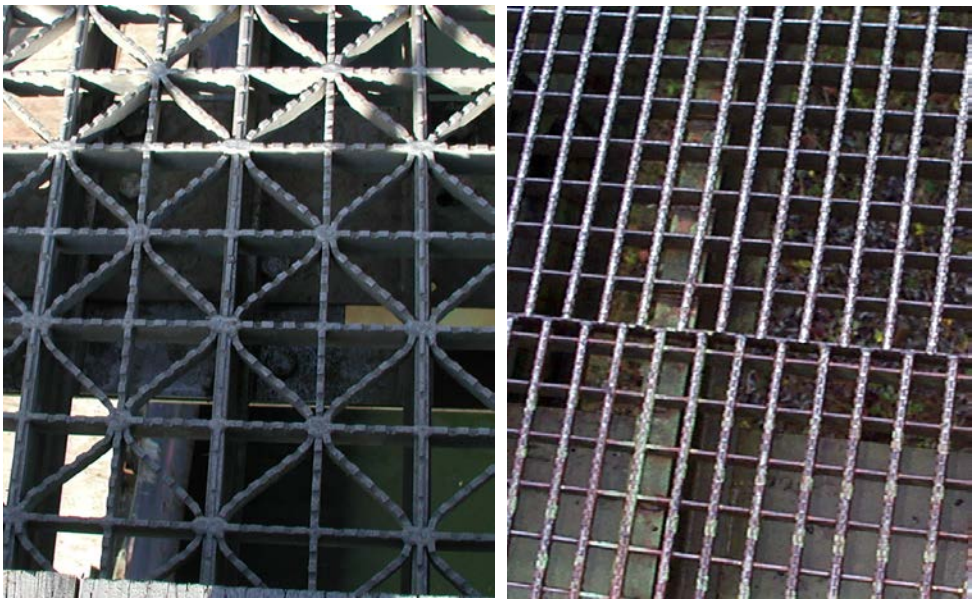

Figure 7.4.4 Various Patterns of Welded Steel Grid Decks

The bearing bars support the grating. Bearing bars are laid on top of the beams or stringers perpendicularly and are then field-welded or bolted to the superstructure. These bars are also referred to as the primary or main bars (see Figure 7.4.7).

The distribution bars are grating bars that are laid perpendicular to the bearing bars. They may be either shop- or field-welded to the grating system. Cross bars, also referred to as secondary bars or distribution bars (see Figure 7.4.7).

The supplementary bars are grating bars parallel to the bearing bars. They are also

shop- or field-welded to the cross bars. Not all grating systems have supplementary bars. These supplementary bars are also referred to as tertiary bars.

Riveted Grid Decks

A riveted grid deck consists of bearing bars, crimp bars, and intermediate bars. Bearing bars run perpendicular to the superstructure and are attached to the beams or stringers by either welds or bolts. They are similar to the bearing bars in welded grates (see Figure 7.4.5).

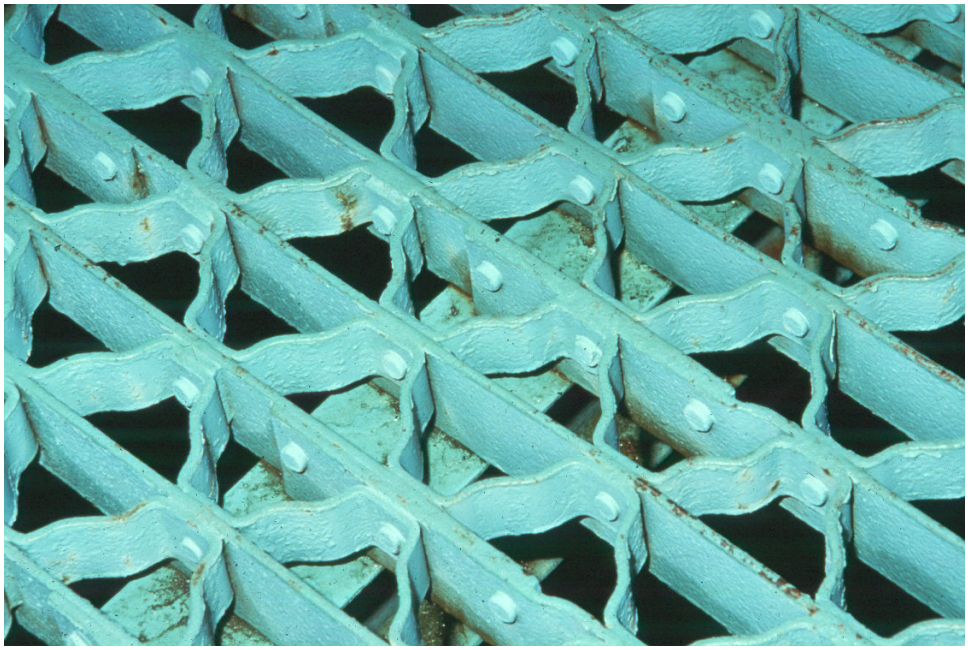

Figure 7.4.5 Riveted Grid Deck

Crimp bars are riveted to the bearing bars to form the grating.

Intermediate bars are parallel to the bearing bars but, in order to reduce the weight of the deck, are not as long. The crimp bars are riveted to intermediate bars. Intermediate bars may not be present on all riveted grate decks.

Welds and rivets used to construct steel grid decks have long been be a source of cracking. In recent years, steel grid decks have been fabricated to eliminate the use of welds or rivets. The bearing bars are fabricated with slotted holes. Transverse distribution bars are inserted into the slots rotated into position and locked into place without the use of any welds or rivets (see Figure 7.4.6).

Figure 7.4.6 Steel Grid Deck with Slotted Holes (to eliminate welding and riveting)

Concrete-Filled Decks

Concrete-filled grid decks offer protection for the floor system against water, dirt, debris, and deicing chemicals that usually pass directly through open grid decks. They can be partially or fully filled. The addition of the concrete is not normally considered when determining the total capacity of the concrete-filled deck.

Fully-filled decks are grid decks that have been completely filled with concrete (see Figure 7.4.7). These decks provide the maximum protection of the underlying bridge members. Form pans are welded at the bottom of the grid to hold the concrete.

Partially-filled decks are grid decks which the top portion is filled with concrete. This provides a reduction in the dead load from the fully-filled deck and the protection of a concrete-filled system.

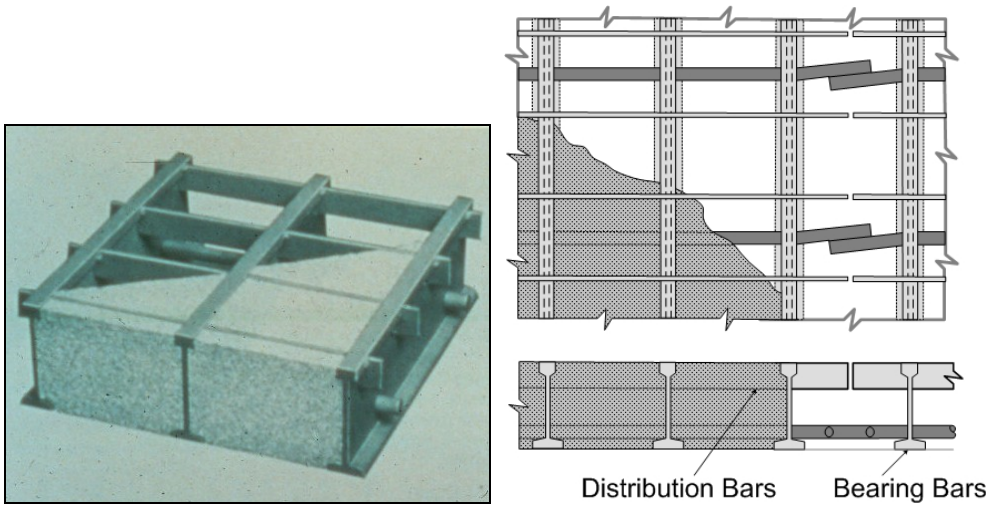

Figure 7.4.7 Concrete-Filled Grid Deck

Figure 7.4.8 Filled and Un-filled Steel Grid Deck

Exodermic Decks

Exodermic decks are a newer type of bridge deck. Reinforced concrete is composite with the steel grid (see Figure 7.4.9). Composite action is achieved by studs that extend into the reinforced concrete deck and are welded to the grid deck below. Galvanized sheeting is used as a bottom form to keep the concrete from falling through the grid holes. Exodermic decks generally weigh 50% to 65% lighter than precast reinforced concrete decks.

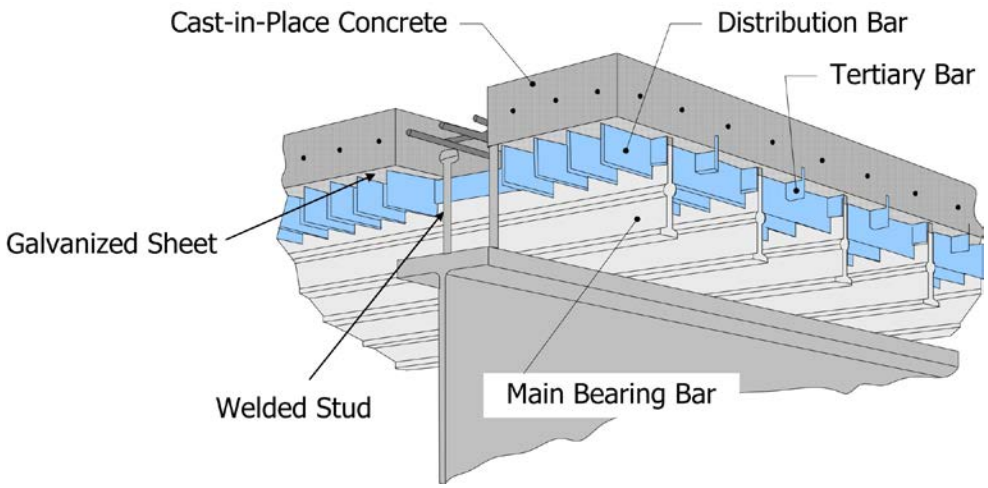

Figure 7.4.9 Schematic of Exodermic Composite Profile

7.4.3 Wearing Surfaces

Wearing surfaces protect the steel deck, provide an even riding surface, and may reduce the water on the deck, bearings and superstructure. Wearing surfaces for steel decks can consist of:

- Serrated steel
- Concrete
- Bituminous
- Gravel

Studs can be welded to steel decks for skid resistance.

Serrated Steel

Open grid decks usually have serrated edges on the grating (see Figure 7.4.4). These serrations allow the standing water to pass more easily through the deck and reduces the chance of hydroplaning.

Concrete

Concrete above the top of the grids, acts as the wearing surface for filled grid decks. This concrete wearing surface and the concrete used to fill the grids are generally placed at the same time. Different types of concrete wearing surfaces are listed and described in Topic 7.2.3. In the case of an exodermic bridge deck, the wearing surface is part of a reinforced deck.

Bituminous

Steel plate decks, such as orthotropic decks, typically have a layer of bituminous or asphalt as the wearing surface. Bituminous overlays generally range from 1 ½ inches up to 3 inches thick. Corrugated steel plank decks also have bituminous wearing surfaces.

An epoxy bituminous polymer concrete also is used for orthotropic bridge deck wearing surfaces. Unlike conventional bituminous mixes, epoxy bituminous polymer concrete will not melt after it has cured because of the thermoset polymer in the mix. This polymer is different than thermoplastic polymer used in conventional bituminous mixes. Epoxy bituminous polymer concrete is used when high strength and elastic composition are important.

Gravel

Corrugated metal decks may utilize a gravel wearing surface applied to the top of the deck. For these type of decks, drains may be located at midspan to minimize water accumulation in the corrugations.

7.4.4 Protective Systems

Paints

Paints provide protection from moisture, oxygen, and chlorides. Usually three coats of paint are applied. The first coat is the primer, the next is the intermediate coat, and the final coat is the topcoat. Various types of paint are used, such as oil/alkyd, vinyl, epoxy, urethane, zinc-rich primer, and latex paints.

Galvanizing

Galvanizing can be used to protect steel decks. The galvanized coating retards the corrosion process and lengthens the life of the steel deck. This occurs by coating the bare steel with zinc. The two dissimilar metals form an electrical current between them and one metal virtually stops its corrosion process while the other's accelerates due to the electrical current. In this situation, the steel stops corroding, while the zinc has accelerated corrosion.

There are two methods of galvanizing steel decks (shop applied and field applied). Hot-dipping the steel deck member usually takes place at a fabrication shop prior to the initial placement of the steel deck. When sections of the deck are too large or when maintenance painting is to take place, the zinc-rich-primers can be applied in the field. The zinc paint needs to be mixed properly, and the surface has to be prepared correctly.

Metalizing

Metalizing is a protective coating for steel. Specifically, it is a thermal spray method, by either flame or arc, for applying aluminum and zinc coatings on steel. Metalizing coatings applied to steel are generally a zinc-aluminum coating and can be applied in the shop or field. The coating provides protection to the steel similar to galvanizing. Metalized coatings often have a top coat (sealer) to extend service life.

Overlay

Another protective system for steel decks is the overlay material itself. The overlay covers the steel deck to create a barrier from corrosive agents. Overlays slow down the deficiency process for steel decks.

Epoxy Coating

Epoxy coating steel grates is another means of protecting the steel decking. This protective coating is rare since the deck becomes very slippery when wet. However, there are a limited number of steel decks with epoxy coating still in service.

7.4.5 Overview of Common Deficiencies

Some of the common steel deck deficiencies are listed below. Refer to Topic 6.3 to review steel deficiencies in detail.

- Bent, damaged, or missing members
- Corrosion
- Fatigue cracks
- Other stress-related cracks

7.4.6 Inspection Methods and Locations

Methods

Visual

The inspection of steel decks for surface corrosion, section loss, buckling, and cracking is primarily a visual activity. Most surfaces of the steel deck can be visually inspected. See Topic 6.3 for a more detailed explanation of visual inspection methods for steel bridge members.

Physical

Once the deficiencies are identified visually, physical methods can be used to verify the extent of the deficiency. Use an inspection hammer or wire brush to remove loose corrosion. This partial loss of cross section due to corrosion is known as section loss. Section loss can be measured using a straight edge and a tape measure. However, a more exact method of measurement, such as calipers or a D-meter, can be used to measure the remaining section of steel. More accurate section loss measurements can be recorded after removal of all corrosion products (rust scale).

Non-corroded bridge members can be measured to verify dimensions recorded in the plans or inspection report are accurate. If incorrect member sizes are used, the load rating analysis for safe load capacity of the bridge is not accurate.

Broken or cracked welds and rivets can be found by listening to the bridge deck. Listen for any unusual or clanking noises as vehicles drive across the steel deck.

Advanced Inspection Methods

In addition, several advanced methods are available for steel inspection. Nondestructive methods, described in Topic 15.3.2, include:

- Acoustic emissions testing
- Computed tomography
- Corrosion sensors
- Smart coatings
- Dye penetrant
- Magnetic particle
- Radiographic testing
- Robotic inspection
- Ultrasonic testing
- Eddy current

Other methods, described in Topic 15.3.3, include:

- Brinell hardness test
- Charpy impact test
- Chemical analysis
- Tensile strength test

Locations

The primary locations for steel deck inspection include:

- **Bearing and shear areas** – check the primary bearing bars for buckled bars, cracked welds, broken fasteners, or missing bars which connect the steel deck to the supporting floor system.
- **Areas exposed to traffic** – examine the top surface for wheel ruts or wear. Verify that the deteriorated deck will not damage tires.
- **Tension areas** – on steel grid decks, check positive and negative moment regions of the primary bearing bars. Look for deficiencies such as broken, bent, fatigue cracks or other stress related cracks, or missing bars.
- **Areas exposed to drainage** – check areas where drainage can lead to corrosion. Look at areas along the curb lines that collect dirt and debris.
- **Corrugated deck** – check between the support points for section loss due to corrosion. Vertical movement of the deck under live load may indicate weld failure.
- **Orthotropic decks** – check orthotropic steel plate decks for debonding of the overlay, rust-through or cracks in the steel plate, and for the development of fatigue cracks in the web elements or connecting welds. Check the connection between the orthotropic plate deck and supporting members.
- **Connections** – examine for broken connections, and listen for rattles as traffic passes over the deck.

- **Filled grid decks** – inspect for grid expansion at joints and bridge ends, often caused by corrosion. Check the condition of the concrete.
- **Areas previously repaired** – document the location and condition of any repair plates and their connections to the deck.

Figure 7.4.10 Broken Members of an Open Steel Grid Deck

7.4.7 Evaluation

State and Federal rating guideline systems have been developed to aid in the inspection of steel decks. The two major rating guideline systems currently in use are the FHWA's *Recording and Coding Guide for the Structural Inventory and Appraisal of the Nation's Bridges* used for the National Bridge Inventory (NBI) component condition rating method and the *AASHTO Guide Manual for Bridge Element Inspection* used for element level condition state assessment.

NBI Component Condition Rating Guidelines

Using NBI component condition rating guidelines, a one-digit code on the Federal Structure Inventory and Appraisal (SI&A) sheet indicates the condition of the deck. Component condition rating codes range from 9 to 0, where 9 is the best rating possible. See Topic 4.2 (Item 58) for additional details about the NBI component condition rating guidelines.

Consider previous inspection data along with current inspection findings to determine the correct component condition rating.

Element Level Condition State Assessment

In an element level condition state assessment of a steel deck, possible AASHTO National Bridge Elements (NBEs) and Bridge Management Elements (BMEs) are:

NBE No.	Description
28	Steel Deck – Open Grid
29	Steel Deck – Concrete-Filled Grid
30	Steel Deck – Corrugated/ Orthotropic

BME No.	**Description**
510	Wearing Surfaces
515	Steel Protective Coating
520	Deck/Slab Protection Systems

The unit quantity for these elements is square feet. The total area is distributed among the four available condition states depending on the extent and severity of the deficiency. The sum of all the condition states equals the total quantity of the National Bridge Element or Bridge Management Element. Condition State 1 is the best possible rating. See the *AASHTO Guide Manual for Bridge Element Inspection* for condition state descriptions.

The following Defect Flags are applicable in the evaluation of steel decks:

Defect Flag No.	**Description**
356	Steel Cracking/Fatigue
357	Pack Rust
363	Steel Section Loss
366	Deck Traffic Impact

See the AASHTO *Guide Manual for Bridge Element Inspection* for the application of Defect Flags

Table of Contents

Chapter 7
Inspection and Evaluation of Bridge Decks and Areas Adjacent to Bridge Decks

7.5 Deck Joints, Drainage Systems, Lighting and Signs 7.5.1

7.5.1 Function of Deck Joints, Drainage Systems, Lighting and Signs 7.5.1
Deck Joints 7.5.1
Drainage Systems 7.5.1
Lighting and Signs 7.5.1

7.5.2 Components of Deck Joints, Drainage Systems, Lighting and Signs 7.5.1
Deck Joints 7.5.1
Strip Seal Expansion Joint 7.5.2
Pourable Joint Seal 7.5.2
Compression Joint Seal 7.5.3
Cellular Seal 7.5.4
Assembly Joint with Seal (Modular) 7.5.5
Plank Seal 7.5.6
Asphaltic Expansion Joint 7.5.7
Open Expansion Joint 7.5.8
Assembly Joint without Seal 7.5.9
Finger Plate Joints 7.5.9
Sliding Plate Joint 7.5.11
Drainage Systems 7.5.13
Deck Drainage 7.5.13
Inlet System 7.5.13
Outlet System 7.5.14
Joint Drainage 7.5.15
Substructure Drainage 7.5.16
Lighting 7.5.16
Highway Lighting 7.5.16
Traffic Control Lighting 7.5.17
Aerial Obstruction Lighting 7.5.17
Navigation Lighting 7.5.17
Signs 7.5.17
Warning Signs 7.5.17
Vertical Clearance 7.5.17
Lateral Clearance 7.5.18
Narrow Underpass 7.5.18
Traffic Regulatory Signs 7.5.18
Speed Limit 7.5.18
Weight Limit 7.5.18
Guide Signs 7.5.18

7.5.3 Common Problems of Deck Joints, Drainage Systems, Lighting and Signs 7.5.18
Deck Joints 7.5.18
Drainage Systems 7.5.19
Lighting and Signs 7.5.19

7.5.4 Inspection Locations and Methods for Deck Joints, Drainage Systems, Lighting and Signs 7.5.19
Deck Joints 7.5.19
Dirt and Debris Accumulation 7.5.20
Proper Alignment 7.5.21
Damage to Seals and Armored Plates 7.5.22
Indiscriminate Overlays 7.5.22
Deck Joint Supports 7.5.23
Joint Anchorage Devices 7.5.23
Deck Areas Adjacent to Deck Joints 7.5.23
Drainage Systems 7.5.24
Grade and Cross Slope 7.5.24
Inlets 7.5.24
Outlet Pipes 7.5.25
Downspout Pipes and Cleanout Plugs 7.5.25
Drainage Troughs 7.5.26
Lighting 7.5.27
Signs 7.5.27
Adhesive Anchors 7.5.27

7.5.5 Evaluation 7.5.29
NBI Component Condition Rating Guidelines 7.5.29
Element Level Condition State Assessment 7.5.30

Topic 7.5 Deck Joints, Drainage Systems, Lighting and Signs

7.5.1 Function of Deck Joints, Drainage Systems, Lighting and Signs

Deck Joints

The deck joint is a very important part of a bridge. The primary function of deck joints is to accommodate the expansion, contraction and rotation of the deck and superstructure. Deck joints are usually located at the each abutment, above piers in multiple span bridges, or at the ends of a drop-in span. In most bridges, the deck joints accommodate this movement and prevent runoff from reaching bridge elements below the surface of the deck. In addition, the deck joint provides a smooth transition from the approach roadway to the bridge deck. The deck joint will be able to withstand all possible weather extremes in a given area. It does all of this without compromising the ride quality of vehicles crossing the bridge.

Drainage Systems

The function of a drainage system is to remove water and all hazards associated with it from the structure. The function is also to protect the superstructure, bearings and substructure. The drainage system also requires as little maintenance as possible and is located so that it does not cause safety hazards.

Lighting and Signs

Lighting serves various functions on bridge structures. Highway lighting is used to increase visibility on a bridge structure. Traffic signal lighting controls traffic on a structure. Aerial obstruction lighting warns aircrafts of a hazard around and below the lights. Navigational lighting is used for the safe control of waterway traffic under a bridge structure. Finally, sign lighting ensures proper visibility for traffic signs.

Typical signs that are present on or near bridges provide regulatory (e.g., speed limits) information and advisory (e.g., clearance warnings) information. Such signs serve to inform the motorist about bridge or roadway conditions that may be hazardous.

7.5.2 Components of Deck Joints, Drainage Systems, Lighting and Signs

Deck Joints

Do not confuse deck joints with construction joints. While deck joints are used primarily to facilitate expansion and contraction of the deck and superstructure, construction joints mark the beginning or end of concrete placement sections during the construction of the bridge deck. The six categories of deck joints are:

- Strip seal expansion joint
- Pourable joint seal
- Compression joint seal
- Assembly joint with seal (Modular)
- Open expansion joint
- Assembly joint without seal

Strip Seal Expansion Joint

A strip seal consists of two slotted steel anchorages cast into the deck or backwall. A neoprene seal fits into the grooves to span the joint extrusion. This joint can accommodate a maximum movement of approximately 4 inches (see Figure 7.5.1).

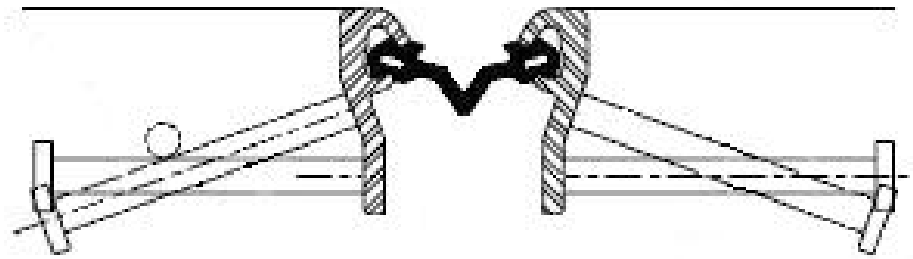

Figure 7.5.1 Strip Seal (Drawing Courtesy of the D.S. Brown Co.)

Pourable Joint Seal

A pourable joint seal is made up of three materials: backing material, preformed joint filler and poured sealant (see Figure 7.5.2). The top of this material is 1 to 2 inches from the top of the deck. The remaining joint space consists of the poured sealant that is separated from the base by a backer rod and/or a bond breaker. Since the pourable joint seal can only accommodate a movement of about 1/4 inch, it is usually found on short span structures (see Figure 7.5.3).

Neoprene foam can be used as an alternative to the preformed expansion filler, allowing a movement of greater than ¼". Both types are used mostly for short span prestressed concrete bridges.

Figure 7.5.2 Pourable Joint Seal

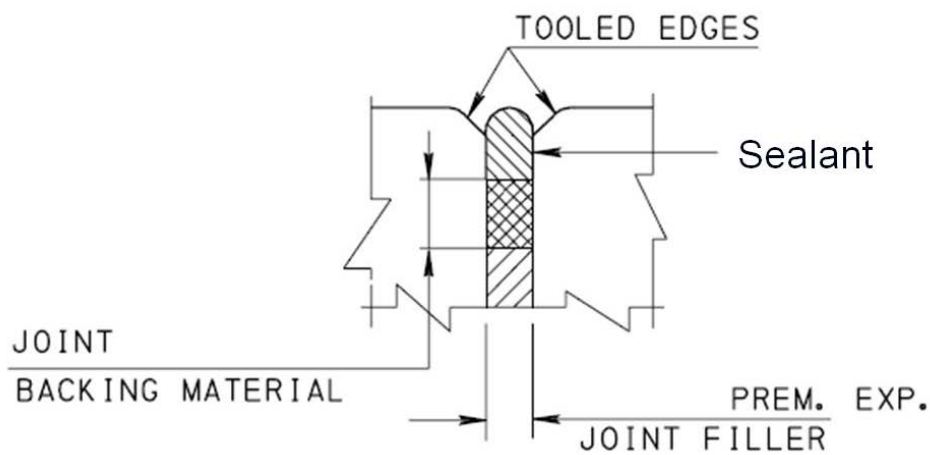

Figure 7.5.3 Cross Section of a Pourable Joint Seal

Compression Joint Seal

A compression joint seal consists of neoprene formed in a rectangular shape with a honeycomb cross section (see Figure 7.5.4 and 7.5.5). The honeycomb design allows the compression joint seal to fully recover after being distorted during bridge expansion and contraction. It is called a compression joint seal because it functions in a partially compressed state at all times. Compression joint seals can have steel angle armoring on the deck and backwall. In some cases, the deck joint is saw cut to accept the installation of the compression seal. In such cases, no armoring is provided. These seals come in a variety of sizes and are often classified by their maximum movement capacity. A large compression joint seal can accommodate a maximum movement of approximately 2 inches.

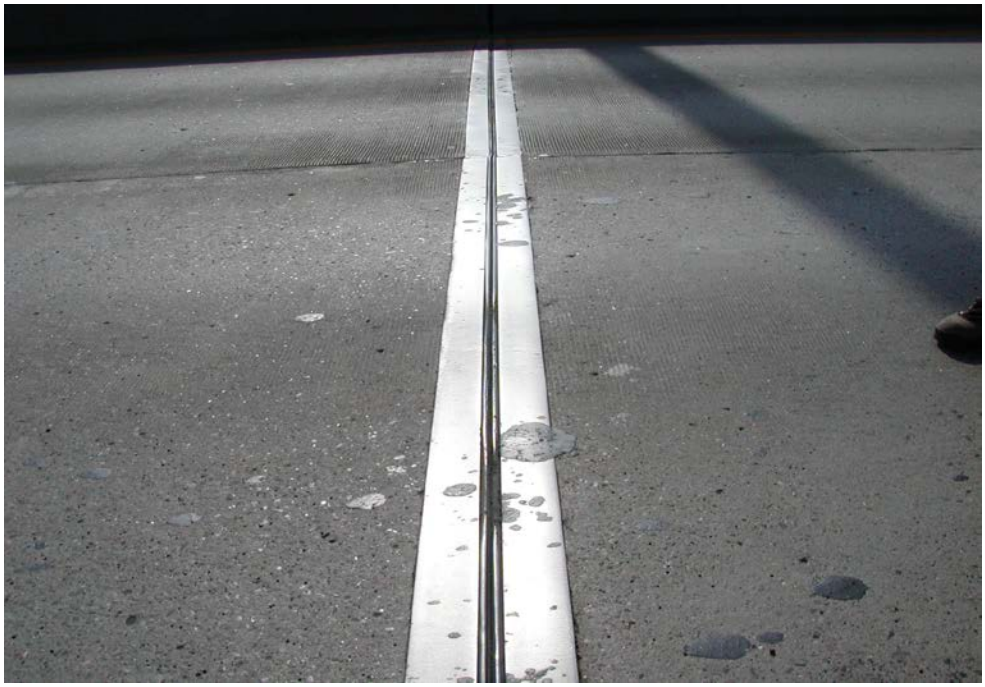

Figure 7.5.4 Compression Joint Seal with Steel Angle Armoring

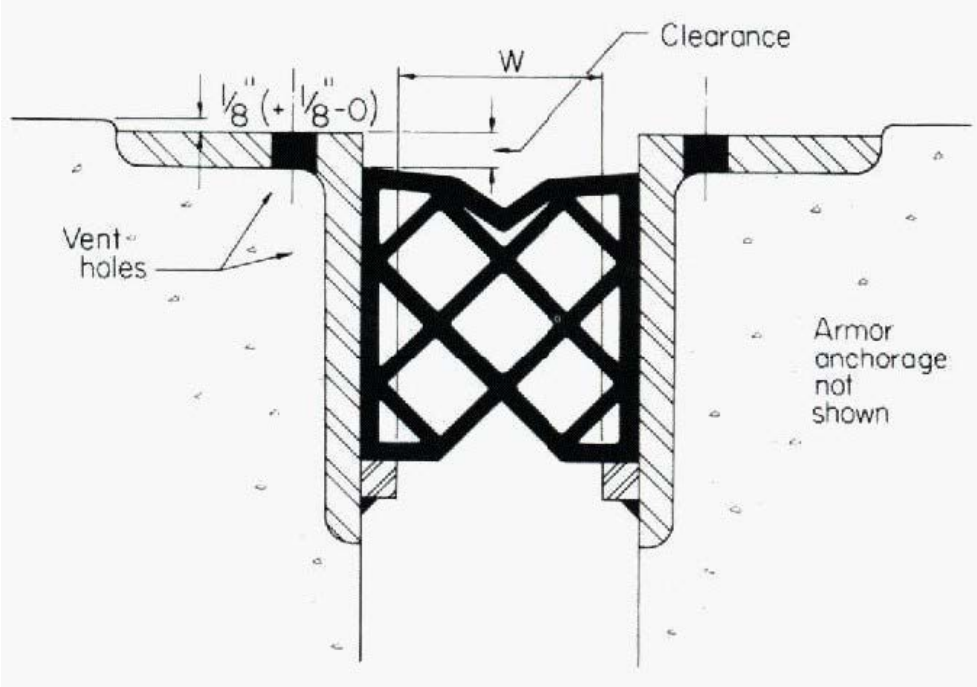

Figure 7.5.5 Cross Section of a Compression Joint Seal with Steel Angle Armoring

Cellular Seal

The cellular seal is similar to the compression joint seal, and its armoring is almost identical. However, they differ in the type of material used to seal the joint. Unlike the compression joint seal, the cellular seal is made of a closed-cell foam that allows the joint to move in different directions without losing the seal (see Figure 7.5.6). This foam allows for expansion and contraction both parallel and perpendicular to the joint. The parallel movement is referred to as racking and

occurs during normal expansion and contraction of a curved structure or a bridge on a skew.

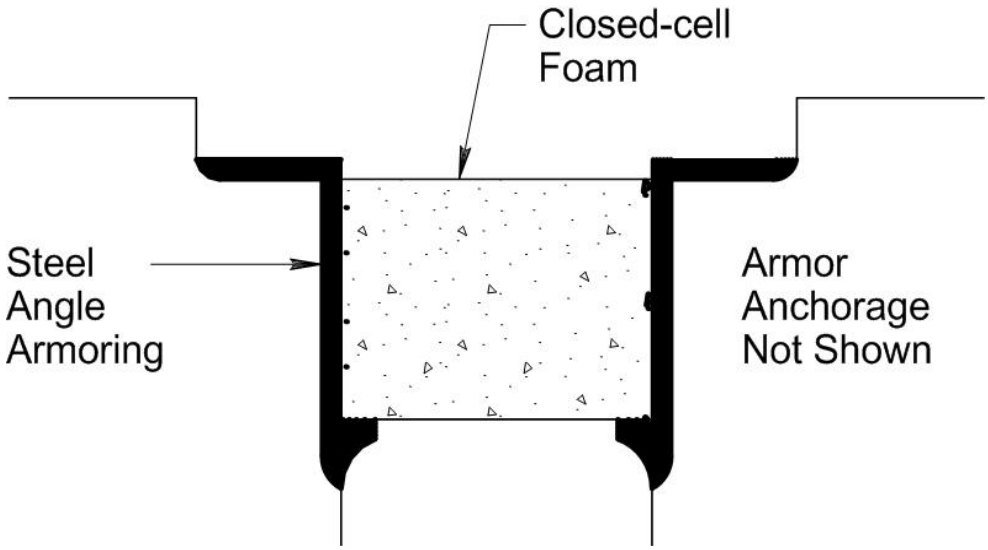

Figure 7.5.6 Cross Section of a Cellular Seal

Assembly Joint with Seal (Modular)

A modular seal is another neoprene type seal which can support vehicular wheel loads. It consists of hollow, rectangular neoprene block seals, interconnected with steel and supported by its own stringer system (see Figure 7.5.7 and 7.5.8). The normal range of operation for movement is between 4 and 24 inches. It can, however, be fabricated to accommodate movements up to 48 inches.

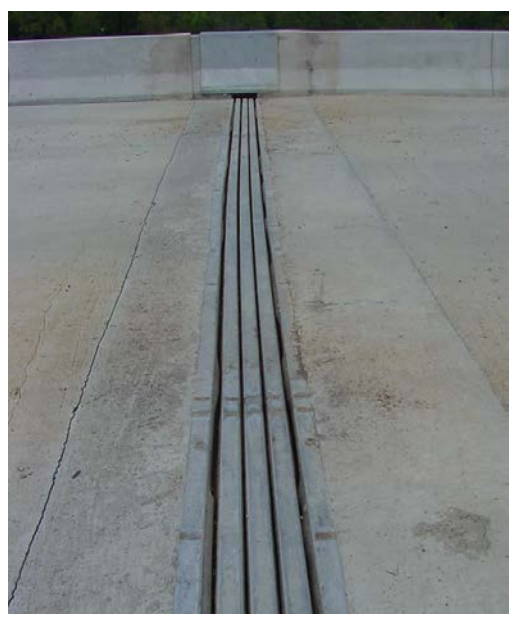

Figure 7.5.7 Modular Seal

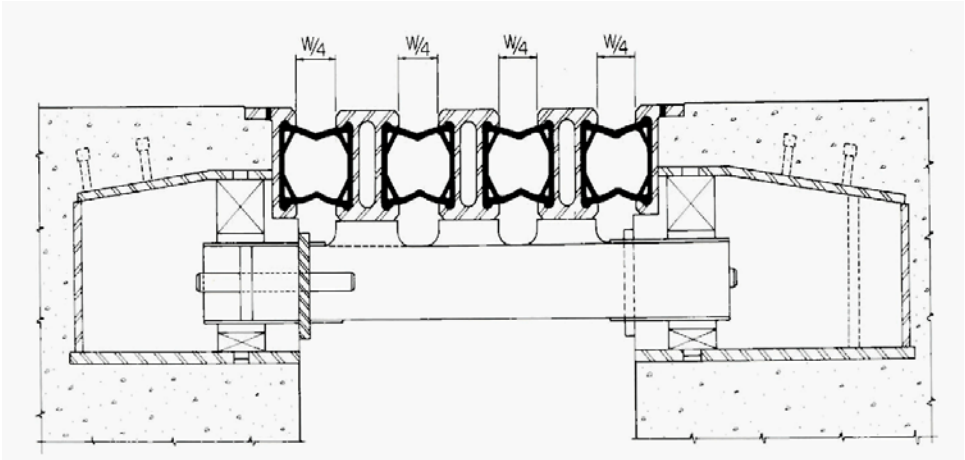

Figure 7.5.8 Schematic Cross Section of a Modular Seal

Assembly joints may also include plank seals, sheet seals and asphaltic expansion joints.

Plank Seal

A plank seal consists of steel reinforced neoprene that supports vehicular wheel loads over the joint. This type of seal is bolted to the deck and is capable of accommodating movement up to 4 inches (see Figure 7.5.9). Plank seals are no longer commonly used.

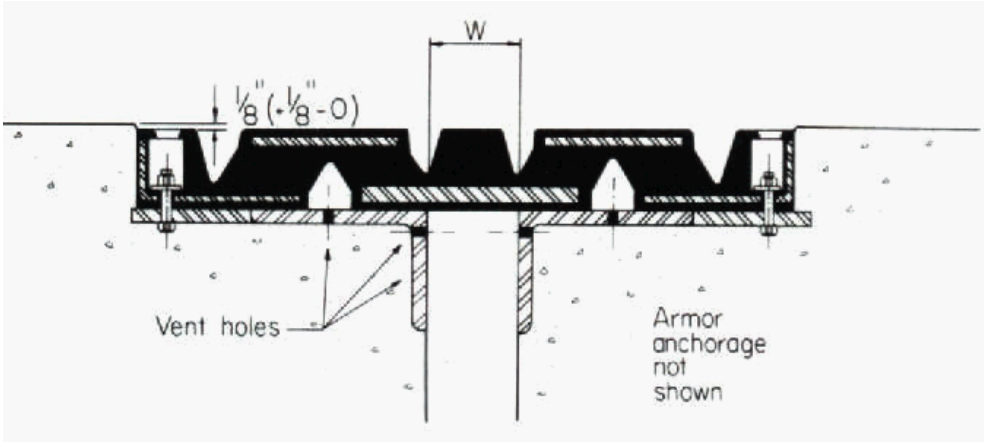

Figure 7.5.9 Plank Seal

A sheet seal consists of two blocks of steel reinforced neoprene. A thin sheet of neoprene spans the joint and connects the two blocks. This joint can accommodate a maximum movement of approximately 4 inches (see Figure 7.5.10).

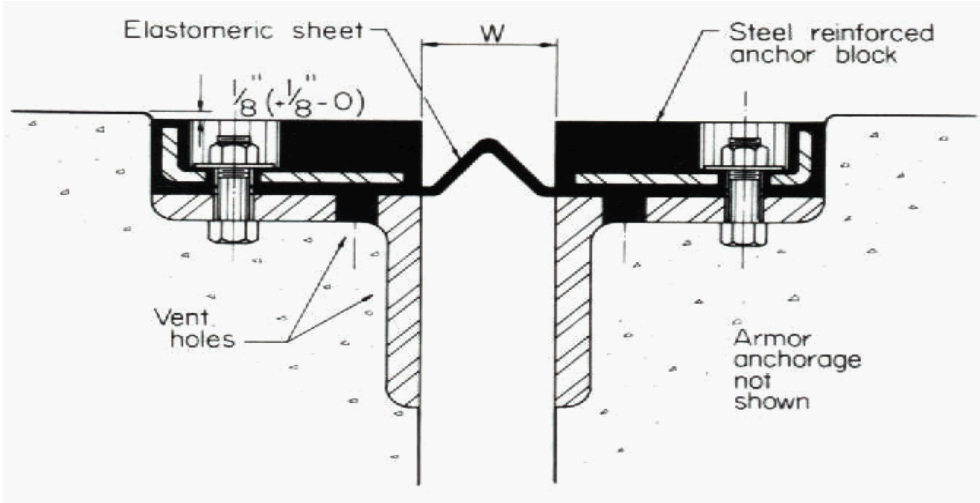

Figure 7.5.10 Sheet Seal

Asphaltic Expansion Joint

An asphaltic expansion joint is typically used on short bridges that are to be overlaid with asphalt. The joint can accommodate an expansion of 2 inches or less. The original joint is usually a formed open joint that has deteriorated. Once the bridge joint is overlaid, the overlay material on the joint and a set distance in both directions of the joint is removed down to the original deck. A backer rod is then placed in the open joint and a sealant material is placed in the joint. Next, an aluminum or steel plate is centered over the joint to bridge the opening, and pins are put through the plate into the joint to hold it in place. A heated binder material is then poured on the plate to create a watertight seal. Layers of aggregate saturated with hot binder are then placed to the depth needed. The filled joint is then compacted. This type of joint allows for bridge decks to be overlaid without damaging existing expansion joints and is gaining popularity (see Figure 7.5.11).

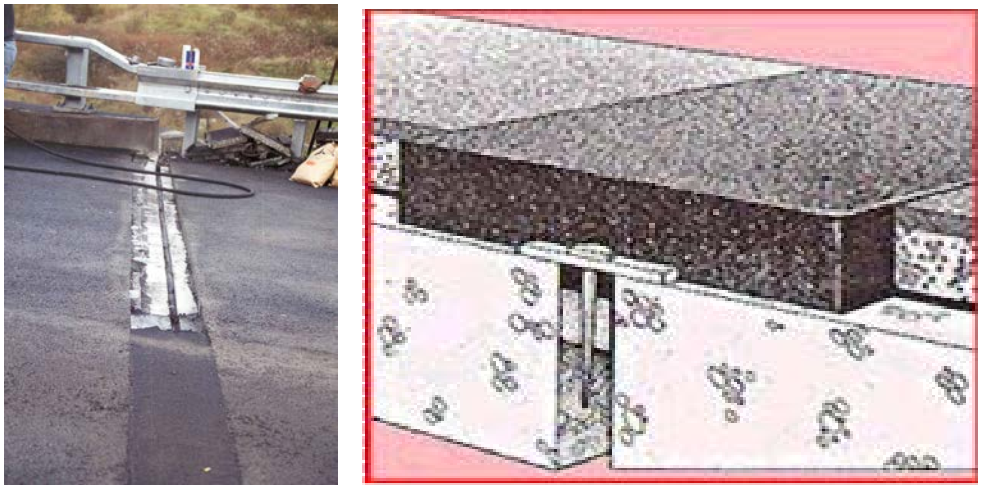

Figure 7.5.11 Asphaltic Expansion Joint

Open Expansion Joint

Open expansion joints are little more than a gap between the bridge deck and the abutment backwall or, in the case of a multiple span structure, between adjacent deck sections. They are usually found on very short span bridges where expansion is minimal. The open expansion joint is usually unprotected, but the deck and backwall can be armored with steel angles. Open expansion joints are common on short span bridges with concrete decks (see Figures 7.5.12 and 7.5.13).

Figure 7.5.12 Open Expansion Joint

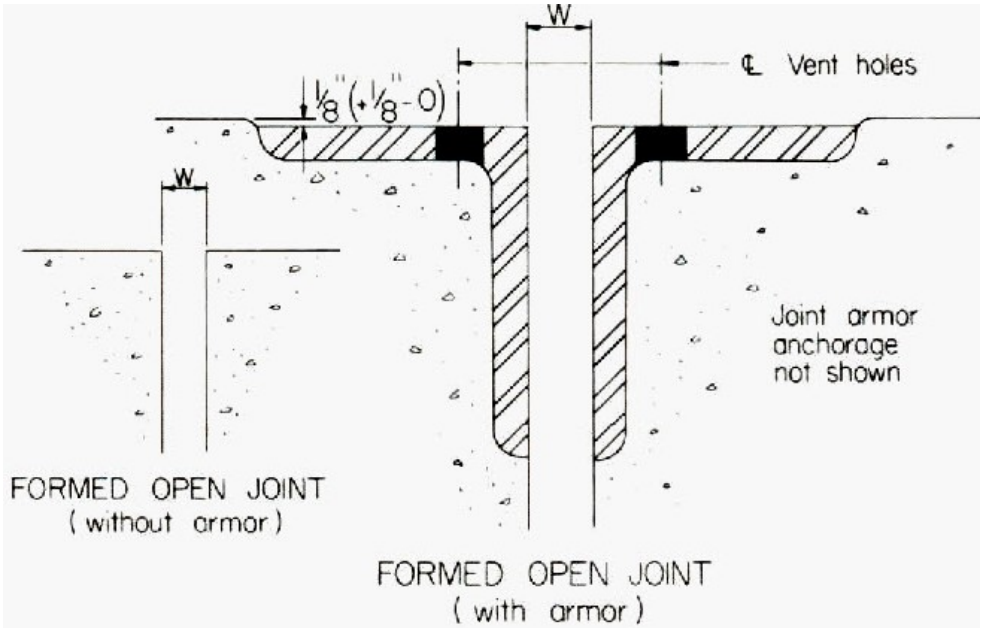

Figure 7.5.13 Cross Section of a Open Expansion Joint

Assembly Joint without Seal

Assembly joints without a seal can include finger plate joints and sliding plate joints.

Finger Plate Joints

A finger plate joint, also known as a tooth plate joint or a tooth dam, consists of two steel plates with interlocking fingers. These joints are usually found on longer span bridges where greater expansion is required. The two types of finger plate joints are cantilever finger plate joints and supported finger plate joints.

The cantilever finger plate joint is used when relatively little expansion is required. The fingers on this joint cantilever out from the deck side plate and the abutment side plate. The supported finger plate joint is used on longer spans requiring greater expansion. The fingers on this joint have their own support system in the form of transverse beams under the joint. Some types of finger plate joints are segmental, allowing for maintenance and replacement if necessary. Finger plate joints are used to accommodate movement from 4 to over 24 inches (see Figures 7.5.14 through 7.5.16).

Troughs are sometimes placed under open finger plate joints. Their purpose is to direct water that passes through the joint away from the superstructure, bearings and substructure.

Figure 7.5.14 Finger Plate Joint

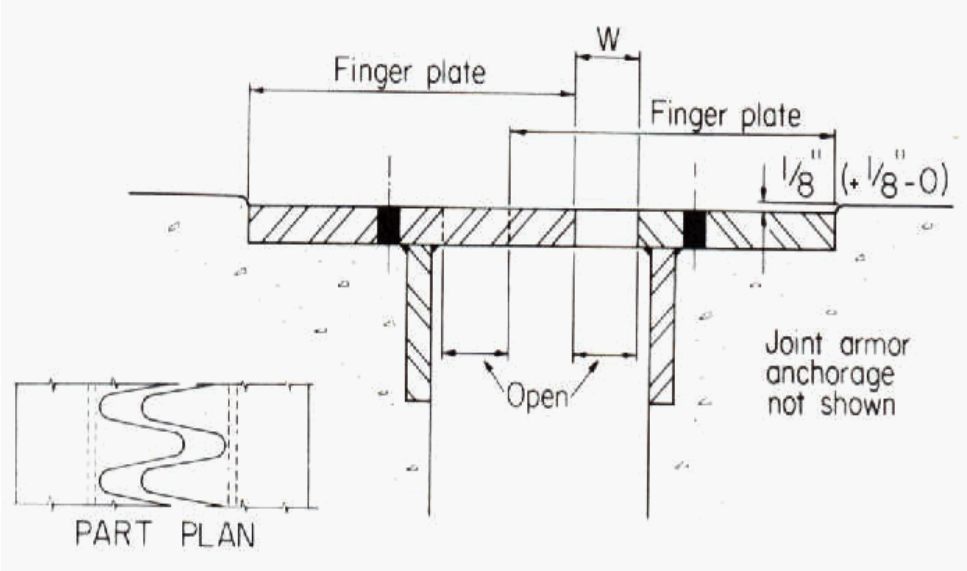

Figure 7.5.15 Cross Section of a Cantilever Finger Plate Joint

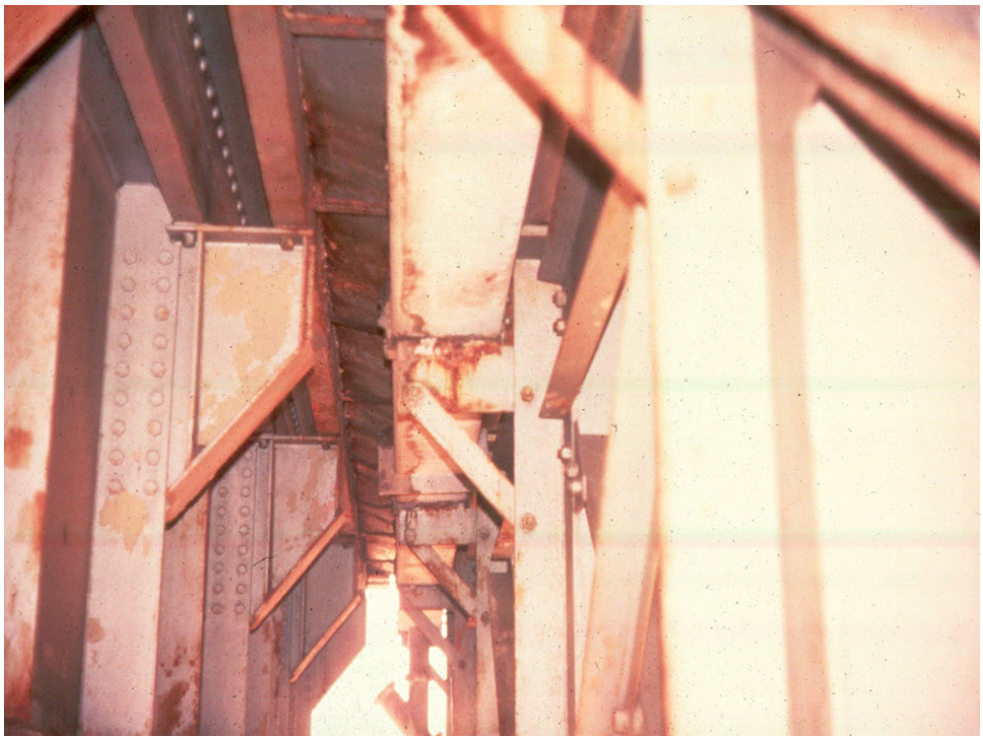

Figure 7.5.16 Supported Finger Plate Joint

Sliding Plate Joint

A sliding plate joint is composed of two plates and is not watertight. The top plate slides across the bottom plate. In an attempt to seal the joint, an elastomeric sheet is sometimes used. This sheet is attached between the plates and the joint armoring. The resulting trough serves to carry water away to the sides of the deck (see Figure 7.5.17 and 7.5.18). The sliding plate joint can accommodate a maximum movement of approximately 4 inches.

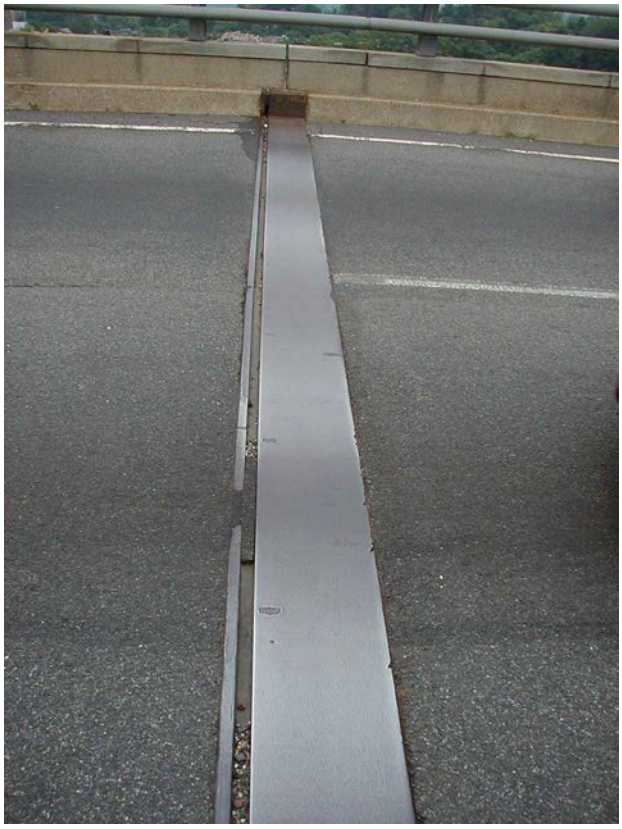

Figure 7.5.17 Sliding Plate Joint

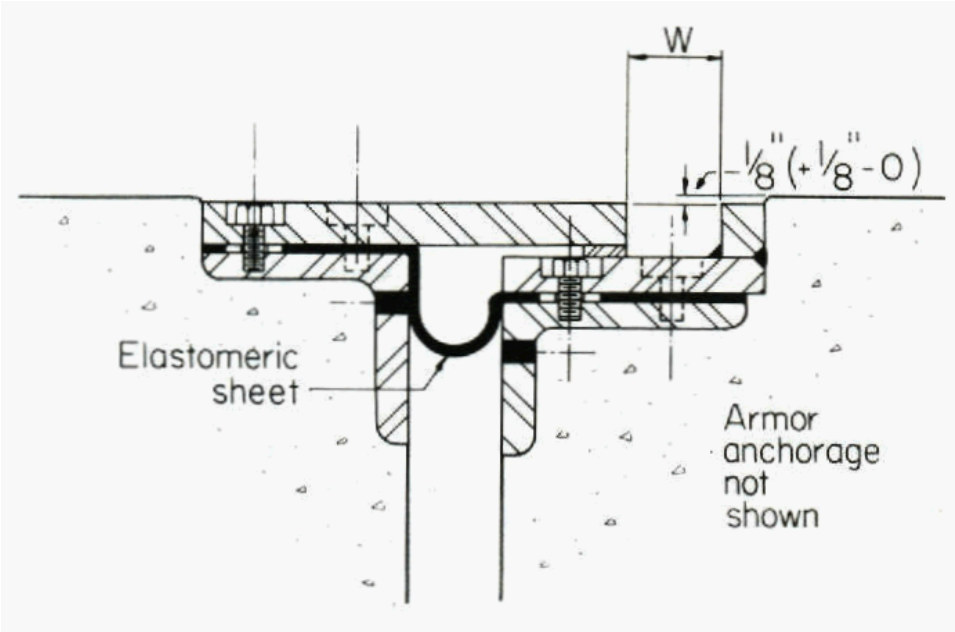

Figure 7.5.18 Cross Section of a Sliding Plate Joint

Drainage Systems

Drainage systems are created to move water away from specific locations on or near a bridge. This is to prevent potential hazards or damage to the bridge and to protect the superstructure, bearings and substructure.

There can be up to three different drainage systems on a given bridge:

- Deck drainage (includes inlet and outlet systems)
- Joint drainage
- Substructure drainage

In order to perform an inspection of a deck drainage system, it is necessary to become familiar with its various elements:

- **Grade and cross slope** - directs the runoff to the inlets and eliminates or reduces ponding. Runoff is the water and any contents from the surface of the bridge deck.
- **Inlets** – receptacle to receive water
- **Outlet pipes** - outlet pipe leads water away from the drain
- **Downspout pipes** – directs deck drainage away from outlet pipes to nearby storm sewer
- **Cleanout plugs** - removable plug in the piping system that allows access for cleaning.
- **Drainage troughs** - maybe located under open joints to divert runoff away from underlying superstructure, bearings and substructure members

Deck Drainage

Inlet System

Inlet systems incorporate scuppers or deck drains (see Figure 7.5.19). Scuppers have a grate, which is a ribbed or perforated cover. Grates are fabricated from steel bars that are frequently oriented with the longitudinal direction of the bridge and spaced at approximately 2 inches on center. A bicycle safety grate has steel rods placed perpendicular to the grating bars, spaced at approximately 4 inches on center. The grates keep larger debris from entering the drainage system while allowing water to pass through. They also serve to support traffic and other live loads.

Deck drains could either be open holes or embedded tubes that are either made of plastic or metal and functions similarly to scuppers**.**

In addition to scuppers and deck drains, inlet systems may also include openings in a filled grid deck or slots in the base of a parapet.

Figure 7.5.19 Bridge Deck Scupper (left) and Deck Drain (right)

Outlet System

The outlet system may incorporate either outlet pipes or downspouts. If present, the outlet pipe leads water away from the inlet system (see Figure 7.5.20). When the bridge is not over a roadway, the outlet pipe normally extends just below the superstructure so that drainage water is not windblown onto the superstructure. When a bridge is over a roadway or a feature, the outlet pipe normally connects to other pipes to prevent runoff from directly falling on the roadway beneath.

When a bridge is located over a roadway, a downspout pipe is used to direct the drainage from the outlet pipe to a nearby storm sewer system or another appropriate release point. This is accomplished with a downspout pipe network (see Figure 7.5.21).

Figure 7.5.20 Outlet Pipe

Figure 7.5.21 Downspout Pipe

Joint Drainage

Joint drainage systems use either a separate gutter or trough (see Figure 7.5.22) to collect water that passes through an unsealed joint such as either a finger plate joint or sliding plate joint. Once the water is collected here, the water is then transported away from the bridge elements.

Debris from the deck runoff may cause the trough to clog frequently and require frequent cleaning to enable them to function as designed. These systems may be constructed from copper, steel or elastomeric sheeting.

Figure 7.5.22 Drainage Trough

Substructure Drainage

Substructure drainage consists of weep holes and underdrains. Weep holes are small drainage holes found in abutment stems and retaining walls which allows water to drain from behind the abutment (see Figure 7.5.23). This type of drainage reduces the earth pressure behind the substructure.

Underdrains are perforated pipes which are routed along the back face of the abutment or retaining wall and are channeled to a nearby waterway or storm water drainage systems.

Figure 7.5.23 Weep Holes

Lighting

The four basic types of lighting which may be encountered on a bridge are:

- Highway lighting
- Traffic control lighting
- Aerial obstruction lighting
- Navigation lighting

Highway Lighting

The typical highway lighting standard consists of a lamp or luminary attached to a bracket arm. Both the luminary and bracket arm are usually made of aluminum. The bracket arm is attached to a shaft or pole made of concrete, steel, cast iron, aluminum, or, in some cases, timber. It is generally tapered toward the top of the pole.

The shaft is attached at the bottom to an anchor base. Steel and aluminum shafts are fitted inside and welded to the base. In the case of concrete, the shaft is normally cast as an integral part of the base. Sometimes the thickness of the parapet or median barrier is increased to accommodate the anchor base. This area of the barrier or parapet is called a “blister”. Where the standard is exposed

to vehicular traffic, a breakaway type base or guardrail may be used. Anchor bolts hold the light standard in place. These L-shaped or U-shaped bolts are normally embedded in a concrete foundation, parapet, or median barrier.

Traffic Control Lighting

Traffic control lights are used to direct traffic on a structure. Lights can serve a similar purpose to those found at intersections, but they can also indicate which lanes vehicular traffic is to use. These are referred to as lane control signals. Red and green overhead lights indicate the appropriate travel lanes.

Aerial Obstruction Lighting

Aerial obstruction lights are used to alert aircraft pilots that a hazard exists below and around the lights. They are red and will be visible all around and above the structure. Aerial obstruction lights are located on the topmost portion of any bridge considered by the Federal Aviation Administration (FAA) to present a hazard to aircraft. Depending on the bridge size, more than one light may be required.

Navigation Lighting

Navigation lights are used for the safe control of waterway traffic. The United States Coast Guard determines the requirements for the type, number, and placement of navigation lights on bridges. The lights are either green, red, or white and the specific application for each bridge site is unique.

Green lights usually indicate the center of a channel. These lights are placed at the bottom midspan of the superstructure. Red lights indicate the existence of an obstacle. When placed on the bottom of the superstructure, a red light indicates the limit of the channel. Lights placed to indicate a pier are placed on the pier near the waterline. Three white lights in a vertical fashion placed on the superstructure indicate the main channel.

Signs

Among the various types of signs to be encountered are signs indicating:

- Warning signs
- Traffic regulatory signs
- Guide signs

Warning Signs

Warning signs alert drivers to existing or potentially hazardous conditions.

Vertical Clearance

Vertical clearance signs indicate the minimum vertical clearance for the structure. This clearance is measured at the most restrictive location within the traveling lanes.

Lateral Clearance

Lateral clearance signs indicate that the bridge width is less than the approach roadway width. Lateral clearance restrictions may be called out with a "Narrow Bridge" sign or with reflective stripe boards at the bridge.

Narrow Underpass

Narrow underpass signs indicate where the roadway narrows at an underpass or where there is a pier in the middle of the roadway. Striped hazard markings and reflective hazard markers will be placed on these abutment walls and pier edges. The approaching pavement will be appropriately marked to warn motorists of the hazard.

Traffic Regulatory Signs

Regulatory signs instruct drivers to do or not do something. Traffic regulatory signs indicate speed restrictions which are consistent with the bridge and roadway design. Additional traffic markers may be present to facilitate the safe and continuous flow of traffic.

Speed Limit

Speed limit signs are important since they indicate any speed restriction that may exist on the bridge.

Weight Limit

Weight limit signs are very important since they indicate the maximum vehicle load that can safely use the bridge.

Guide Signs

Guide signs come in a variety of shapes and colors and have information to help drivers arrive safely at their destination.

7.5.3 Common Problems of Deck Joints Drainage Systems, Lighting and Signs

Deck Joints

Common problems encountered when inspecting deck joints include the following:

- Debris and accumulation of dirt in deck joints and troughs under finger joints
- Corrosion on joints and their supports
- Damaged, torn, or missing joint seals due to snow plows, traffic, or debris buildup

- Spalled edges on joints without armor
- Spalled edges on joints due to misalignment of both sides of the joint
- Broken or misaligned fingers
- Leaking closed joint systems (or evidence of leaking)

Drainage Systems

Common problems encountered when inspecting drainage systems include the following:

- Debris buildup at inlet grate where water from the deck enters the drainage system
- Clogged or partially clogged deck drains and/or inlets
- Deck joint troughs clogged or partially clogged
- Disconnected/clogged downspout piping
- Cracked or split pipes
- Loose or missing connections (from drain pipe below the deck to outlet pipe)
- Corrosion or section loss in metal pipes

Lighting and Signs

Common problems encountered when inspecting lighting and signs include the following:

- Lighting and signs obstructed from view due to tree growth or other signs
- Lighting and signs not present at bridge site
- Signs presented unacceptably or incorrectly
- Signs defaced or covered with graffiti
- Corrosion or section loss on lighting or sign supports
- Loose or missing anchorages at supports
- Lighting outages

7.5.4 Inspection Locations and Methods for Deck Joints, Drainage Systems, Lighting and Signs

Deck Joints

The deck joints allow for the expansion and contraction of the bridge deck and superstructure. Inspectors report and document any site conditions that prevent the deck joints from functioning properly.

Using the NBIS guidelines, there is not a separate item on the Structure Inventory

and Appraisal (SI&A) sheet to code the serviceability of deck joints. Deck joint conditions are not considered in the rating of the deck. However, it is important for the inspector to note their condition since leaking deck joints lead to the deterioration of superstructure, bearings and substructure elements beneath the joints.

The Element Level Inspection system, however, does rate deck joints. For a detailed description of deck joint condition states, see the AASHTO *Guide Manual for Bridge Element Inspection* and the evaluation section of this topic.

Inspect the deck joints for:

- Dirt and debris accumulation
- Proper alignment (horizontal/vertical)
- Damage to seals and armored plates
- Indiscriminate overlays
- Joint supports
- Joint anchorage devices

Dirt and Debris Accumulation

Dirt and debris lodged in the joint may prevent normal expansion and contraction, causing cracking in the deck and backwall, and overstress in the bearings. In addition, as dirt and debris is continually driven into a joint, the joint material can eventually fail (see Figures 7.5.24 and 7.5.25).

Figure 7.5.24 Debris Lodged in a Sliding Plate Joint

Figure 7.5.25 Dirt in a Compression Seal Joint

Proper Alignment

To ensure a smooth ride and to prevent snow plow damage, deck joints are placed to provide smooth transition between spans or between the end spans and the abutments. Any vertical or horizontal displacement between the two sides of the joint is documented by the inspector. On straight bridges, the joint opening is designed to be parallel across the deck.

In a finger plate joint, the individual fingers will mesh together properly, and they will be in the same plane as the deck surface. Document any vertical or horizontal misalignment (see Figure 7.5.25).

Figure 7.5.26 Improper Vertical Alignment at a Finger Plate Joint

Thermal expansion and contraction of a bridge is possible through properly functioning deck joints. It is important that the relative joint openings are consistent with the current temperature. It is also important to record the deck joint opening to determine if the opening is consistent with the temperature at the time of the inspection. Temperature above the average causes the bridge to expand (lengthen) resulting in a decreased or smaller deck joint opening. Temperature below average causes the bridge to contract (shorten) resulting in an increased deck joint opening. Measurements will be taken at each curb line and the centerline of the roadway. The superstructure temperature can be taken by a regular thermometer or by placing a surface temperature thermometer against the

superstructure member itself. The superstructure temperature is generally about 3 to 5 degrees Fahrenheit below the air temperature.

Damage to Seals and Armored Plates

Damage from snow plows, traffic, and debris can cause the joint seals to be torn, pulled out of the anchorage, or removed altogether (see Figure 7.5.26). It can also cause damage to armored plates. Any of these conditions will be noted by the inspector. Also look for evidence of leakage through sealed joints.

Figure 7.5.27 Failed Compression Seal

Indiscriminate Overlays

When new pavement or wearing surface is applied to a bridge, it is frequently placed over the deck joints with little or no regard for their ability to function properly. This occurs most frequently on small, local bridges. Transverse cracks in the pavement may be evidence that a joint has been covered by the indiscriminate application of new overlay, and the joint function may be severely impaired (see Figure 7.5.27).

Figure 7.5.28 Asphalt Wearing Surface over an Expansion Joint

Deck Joint Supports

Joint supports are required when large deck joints are utilized. These supports connect the deck joint devices to the superstructure. Inspect these joint supports carefully for proper function and for corrosion and section loss (see Figure 7.5.28).

Figure 7.5.29 Support System under a Finger Plate Joint

Joint Anchorage Devices

Deficiencies in joint anchorage devices are a common source of deck joint problems. Therefore, joint anchorage devices should be carefully inspected for proper function and for corrosion. The concrete area in which the joint anchorage device is cast should also be inspected for signs of deterioration. This area adjacent to the joint is known as the joint header.

Deck Areas Adjacent to Deck Joints

Many deck joints are connected to the deck utilizing some type of anchorage (see Figures 7.5.15 and 7.5.17). Examine deck areas adjacent to deck joints for material deterioration such as section loss, spalls, delaminations, and vehicular/snow plow damage. Deterioration of the deck in these areas may be an indication of problems with the anchorage.

Drainage Systems

A properly functioning drainage system removes water, and all hazards associated with it, from a structure. There is not a separate item on the NBIS SI&A Sheet to code the serviceability of drainage systems, and drainage system conditions are not considered in the rating of the bridge. However, it is important for the inspector to note their condition, since drainage system problems can eventually lead to structural problems.

Inspect the following drainage system elements:

- Grade and cross slope
- Inlets
- Outlet pipes
- Downspout pipes
- Cleanout plugs
- Drainage troughs

Grade and Cross Slope

The deck cross slope and profile should not prevent runoff from entering the deck drains and inlets. Check to determine adequate cross slope or profile is provided so that water runs off the bridge deck at a sufficient rate. Ponding is an indication of insufficient cross slope or profile.

Inlets

Careful examination of the drainage elements is to be performed at each bridge inspection since runoff conditions can change. For the runoff to be carried away from the structure, inlets are designed at a sufficient size and spacing to allow water to pass through. Document any deteriorated, broken or missing grates on inlets, which can be considered a safety issue. Inlets should be clear of debris to allow the runoff to enter. Clogged inlets lead to accelerated deck deterioration and the undesirable condition of standing water in the traffic lanes (see Figure 7.5.29). Standing water on the deck is a safety hazard.

Figure 7.5.30 Clogged Scupper

Outlet Pipes

Outlet pipes carry runoff away from the structure. The outlet pipe may be a straight extension of the deck drain, in which case it will be long enough so that runoff is not discharged onto the structure.

Downspout Pipes and Cleanout Plugs

Downspout pipes are a series of pipes (see Figure 7.5.30). Examine downspout pipes for split or disconnected pipes that may allow runoff to accelerate deterioration of the structure. Check the connections between the downspout pipes and substructure. If a pipe is embedded inside of a substructure unit such as a concrete pier wall, check for cracking, delamination, or other freeze-thaw damage to the substructure.

Cleanout plugs are removable caps that allow access so the outlet pipes can be cleaned and kept clear of debris (see arrows in Figure 7.5.30). Having access to the cleanout plugs is important. If there is evidence of clogged outlet pipes, make recommendations to remove the cleanout plugs and clear the debris.

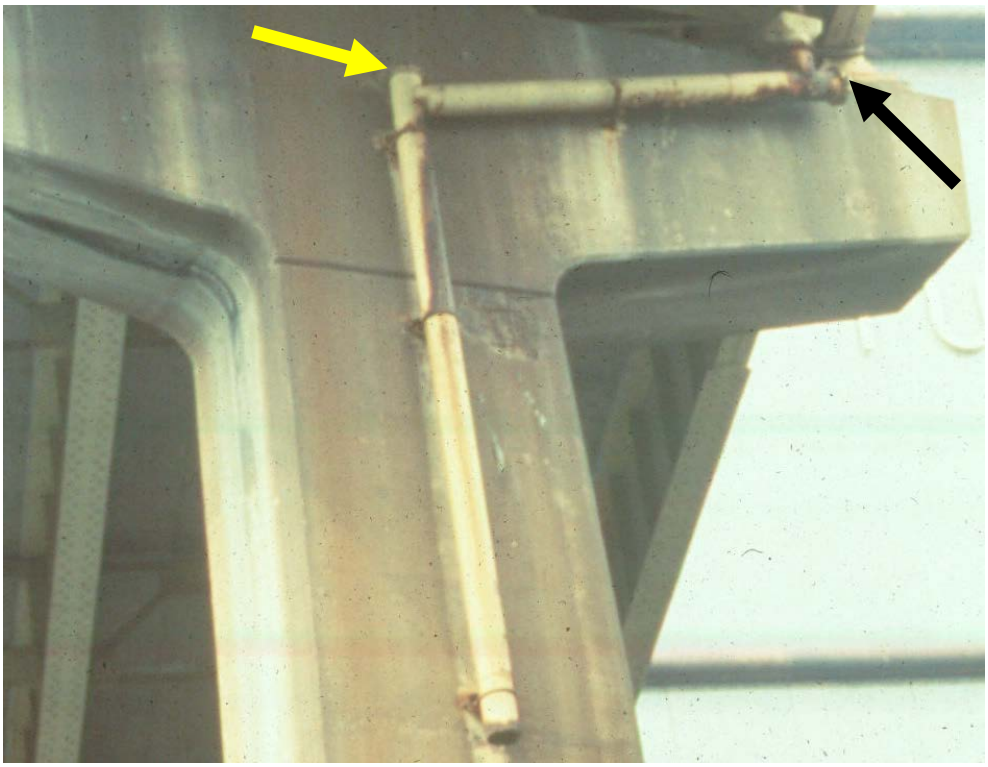

Figure 7.5.31 Outlet Pipe with Cleanout Plugs

Drainage Troughs

Carefully examine drainage troughs, if present, located under unsealed joints. A buildup of debris can accelerate the deterioration of the trough or its supports and allow water to drain onto structural members (see Figure 7.5.30). If possible, use a shovel to clean as much debris as practical; report the remaining condition for appropriate maintenance work. Once cleaned, note any holes found in the trough. Record any evidence that indicates the trough is overflowing.

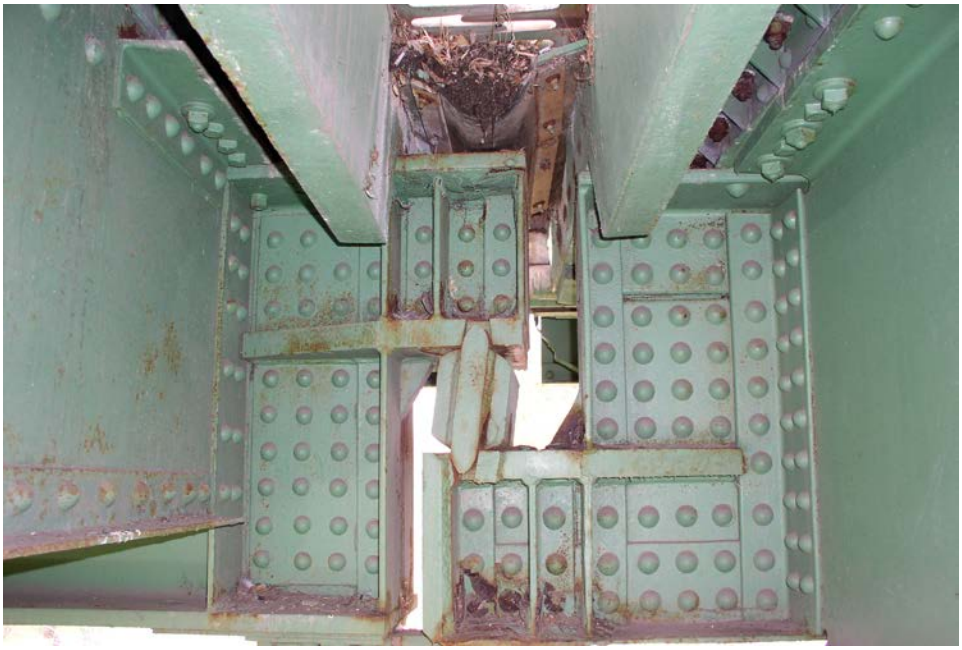

Figure 7.5.32 Drainage Trough with Debris Accumulation

Lighting

All lights are to be clearly visible. Verify that all lights are functioning and that they are not obstructed from view. Check for fatigue cracking, corrosion, and collision damage to light supports. Verify that appropriate lighting is provided. Exercise caution against electrical shock. Contact the maintenance department to de-energize the lighting.

Signs

Signs are to be located sufficiently in advance of the structure to permit the driver adequate time to react. All signs are to be clearly legible. Verify that signs have not been defaced and are not obstructed from view. Inspect for fatigue cracking, corrosion, and collision damage to sign supports. Verify that appropriate signing is provided.

Adhesive Anchors

Adhesive anchors have several applications used in bridge construction, but two of the most prominent include fence or light support attachments and sign mounting (see Figure 7.5.33).

It may be necessary to review the design or as-built or rehabilitation drawings to determine how the anchor bolts are attached to the bridge. Based upon the application, the anchor itself may not be visible which will make a visual inspection difficult. There are clues that would provide some evidence as to the condition and effectiveness of the anchor.

Depending on the direction of the loads, the anchor bolts may experience one or more of the following: axial tension, axial compression, tension or compression due to moment or shear. Although the yielding of the anchor bolts is a failure mode, the inspector looks for anchor embedment problems, or anchor pullout, that results from adhesive failure. Fence or light pole anchors will more often than not be subjected due to moment and not axial tension. Axial tension anchorages are not very common unless the attachment is "hung" from the bridge.

Figure 7.5.33 Sign and Light Structures Attached to a Bridge

Be sure to pay particular attention to any anchor pullout that may exist. This could be caused by excessive creep or failure of the adhesive. Look for inconsistent spacing between the anchor plate and concrete surface (see Figure 7.5.34). This could occur from axial tension load or tension due to moment.

Figure 7.5.34 Sign Attachment Exhibiting Anchor Pullout

Large signs attached to the backside of a concrete barrier is another possible application where adhesive anchors may be used in today's bridges (see Figure 7.5.35). It is important to not only document the anchor location and orientation, but to determine, as close as possible, how the anchor functions. Note any gaps between the mounting hardware and the concrete surface where the anchor is embedded. If gaps exist, measure the gaps and document them with notes, photographs, and sketches.

Figure 7.5.35 Sign Mount with Loose Adhesive Anchorage

7.5.5 Evaluation

State and Federal rating guideline systems have been developed to aid in the inspection of deck joints, drainage systems, lighting, and signs. The two major rating guideline systems currently in use are the FHWA's *Recording and Coding Guide for the Structural Inventory and Appraisal of the Nation's Bridges* used for the National Bridge Inventory (NBI) component condition rating method and the *AASHTO Guide Manual for Bridge Element Inspection* used for element level condition state assessment.

NBI Component Condition Rating Guidelines

Deck joints, drainage systems, lighting, and signs do not impact the deck rating, but their condition can be described on the inspection form. Record deficiencies in deck joints, drainage systems, lighting, and signs on the inspection and maintenance sheets.

Element Level Condition State Assessment

In an element level condition state assessment of deck joints, there are no AASHTO National Bridge Elements (NBEs).

Possible AASHTO Bridge Management Elements (BMEs) are:

BME No.	Description
300	Strip seal expansion joint
301	Pourable joint seal
302	Compression joint seal
303	Assembly joint with seal (modular)
304	Open expansion joint
305	Assembly joint without seal

The unit quantity for deck joints is feet. The total length is distributed among the four available condition states depending on the extent and severity of the deficiency. The sum of all condition states equals the total quantity of the Bridge Management Element. Condition State 1 is the best possible rating. See the *AASHTO Guide Manual for Bridge Element Inspection* for condition state descriptions.

Individual states have the option to change or add element numbers. In the case of expansion joints, some states have added a miscellaneous expansion joint element number.

The following Deflect Flags are applicable in the evaluation of steel decks:

Defect Flag No.	Description
356	Steel Cracking/Fatigue
357	Pack Rust
358	Concrete Cracking
359	Concrete Efflorescence
363	Steel Section Loss

See the AASHTO *Guide Manual for Bridge Element Inspection* for the application of Defect Flags.

Drainage systems, lighting, and signs have no National Bridge or Bridge Management separate element numbers. The condition of the drainage systems, lighting, and signs, however, will be noted on the inspection form.

Table of Contents

Chapter 7
Inspection and Evaluation of Bridge Decks and Areas Adjacent to Bridge Decks

7.6 Safety Features 7.6.1

7.6.1 Introduction 7.6.1
Purpose 7.6.1
Four Basic Components 7.6.2
Bridge Railings 7.6.2
Transitions 7.6.2
Approach Guardrail 7.6.2
Approach Guardrail Ends 7.6.3

7.6.2 Evaluation 7.6.4
Design Criteria 7.6.4
History of Crash Testing 7.6.4
Crash Test Criteria 7.6.6
Current FHWA Policy 7.6.7
Railing Evaluation Results/Resources 7.6.8
Available Training Courses 7.6.9

7.6.3 Identification and Appraisal 7.6.10
Appraisal Coding 7.6.10
36A Bridge Railings 7.6.11
36B Transitions 7.6.12
36C Approach Guardrail 7.6.13
36D Approach Guardrail Ends 7.6.14

7.6.4 Safety Feature Inspection 7.6.16
Inspection 7.6.16
Bridge Railing 7.6.16
Approach Guardrail 7.6.17
Transition 7.6.18
Approach Guardrail End 7.6.19
Inspection for Non-NHS Bridges 7.6.20

7.6.5 Median Barriers 7.6.21
Inspection of Median Barriers 7.6.21

7.6.6 Evaluation 7.6.21
NBI Component Condition Rating Guidelines 7.6.21
Element Level Condition State Assessment 7.6.21

This page intentionally left blank.

Topic 7.6 Safety Features

7.6.1 Introduction

Highway design includes a special emphasis on providing safe roadsides for errant vehicles that may leave the roadway. Obstacles or fixed object hazards have typically been removed from within a specified roadside recovery area. Whenever this has not been feasible (for example, at bridge waterway crossings), safety features such as highway or bridge barrier systems have been provided to screen motorists from the hazards present (see Figure 7.6.1). Such barriers sometimes constitute fixed object hazards themselves, though hopefully of less severity than the hazard they screen.

Figure 7.6.1 Bridge Safety Feature

Purpose

The barriers on bridges and their approaches are typically intended to provide vehicular containment and prevent motorist penetration into the hazard being over-passed, such as a stream or under-passing roadway or railroad. Containment of an errant vehicle is a primary consideration, but survival of vehicle occupants is of equal concern. Thus the design of bridge railing systems and bridge approach guardrail systems is intended to first provide vehicular containment and redirection, but then to also prevent rollover, to minimize snagging and the possibility of vehicle spinout, and to provide smooth vehicular redirection parallel with the barrier system. In addition, the bridge railing and bridge approach guardrail systems must do all of this within tolerable deceleration limits for seat-belted occupants.

Four Basic Components

Barrier systems at bridges are composed of four basic components:

- Bridge railings
- Transitions
- Approach guardrail
- Approach guardrail ends

These four basic components are designed to satisfy agency standards, which specify acceptable heights, materials, strengths, and geometric features.

Bridge Railings

The function of bridge railing is to contain and smoothly redirect errant vehicles on the bridge (see Figures 7.6.2 and 7.6.3). Many bridge rails could conceivably do this, but the safety of the driver and redirection of the vehicle must be taken into account.

Transitions

A transition occurs between the approach guardrail system and bridge railing (see Figures 7.6.2 and 7.6.3). Its purpose is to provide both a structurally secure connection to the rigid bridge railing and also a zone of gradual stiffening and strengthening of the more flexible approach guardrail system. Stiffening is essential to prevent "pocketing" or "snagging" of a colliding vehicle just before the rigid bridge railing end.

If, on impact, a redirective device undergoes relatively large lateral displacements within a relatively short longitudinal distance, pocketing is said to have occurred. Depending on the degree, pocketing can cause large and unacceptable vehicular decelerations. When a portion of the test vehicle, such as a wheel, engages a vertical element in the redirective device, such as a post, snagging is said to have occurred. The degree of snagging depends on the degree of engagement. Snagging may cause large and unacceptable vehicular decelerations.

Approach Guardrail

The approach guardrail system is intended to screen motorists from the hazardous feature beneath the bridge as they are approaching the bridge (see Figures 7.6.2 and 7.6.3). This approach guardrail screening is often extended in advance of the bridge so as to also keep motorists from any additional hazardous roadside features on the approach to the bridge.

Approach guardrail must have adequate length and structural qualities to safely contain and redirect an impacting vehicle within tolerable deceleration limits. Redirection should be smooth, without snagging, and should minimize any tendency for vehicle rollover or subsequent secondary collision with other vehicles.

Approach Guardrail Ends

The approach guardrail end is the special traffic friendly anchorage of the approach guardrail system (see Figures 7.6.2 and 7.6.3). It is located at the end at which vehicles are approaching the bridge. Ground anchorage is essential for adequate performance of the guardrail system. A special approach guardrail end is necessary in order to minimize its threat to motorists as another fixed object hazard within the roadside recovery area.

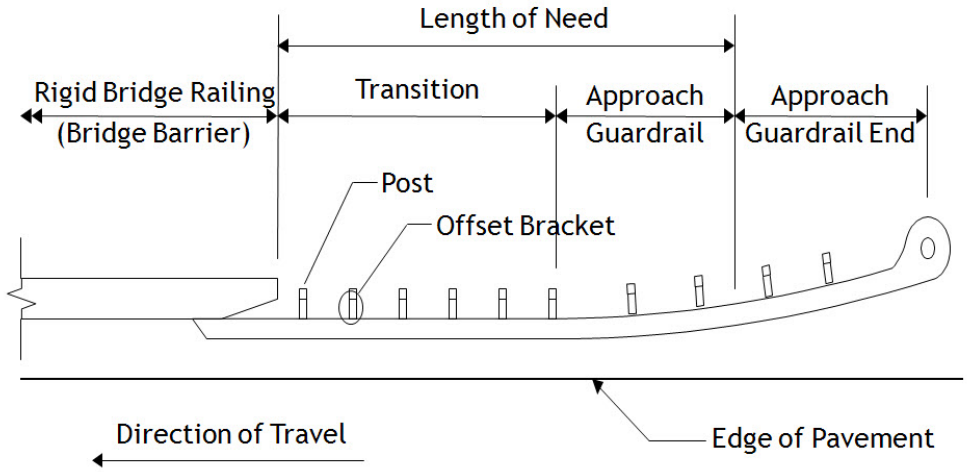

Figure 7.6.2 Traffic Safety Features

Figure 7.6.3 Bridge Railing, Transition, Approach Guardrail and Approach Guardrail End

7.6.2 Evaluation

Each of the various elements of traffic safety features are designed to meet a specific function. Based on items from an inspection checklist, the inspector can make a determination of whether or not these elements function as intended. The elements for bridge railings and guardrail systems, including transitions and approach guardrail ends, must pass the minimum standard criteria established by AASHTO and FHWA and NCHRP minimum standards for structures on the NHS.

Design Criteria

Until the mid 1980's, bridge railings were designed consistent with earlier precedent, the guidance provided in the *AASHTO Standard Specifications for Highway Bridges*, and professional judgment. The *AASHTO Standard Specifications* called for application of a 10-kip horizontally applied static load at key locations, and certain dimensional requirements were also specified. Full-scale crash testing was not required, although a design that "passed" such testing was also considered acceptable for use. Subsequent crash testing of several commonly used, statically designed bridge railings revealed unexpected failures of the safety feature systems. It was soon concluded that static design loadings were not sufficient to ensure adequate railing performance. As a result of these findings, the FHWA issued guidance in 1986 requiring that bridge railing systems must be successfully crash tested and approved to be considered acceptable for use on Federal-aid projects.

Longitudinal roadside barriers, such as guardrail systems, had also been designed consistent with earlier precedent and judgment. Subsequent crash testing of these systems again revealed some unacceptable designs and prompted development of several new guardrail systems and details that were then identified as acceptable for new highway construction on Federal-aid projects.

History of Crash Testing

Full scale crash testing began in 1962. "Highway Research Correlation Circular 482" listed methods including specified vehicle mass, impact speed and approach angle.

National Cooperative Highway Research Program (NCHRP) Project 22-2 in 1973 addressed questions not covered in "Circular 482". The final report is "NCHRP Report 183" which gave more complete set of testing methods. Several parts of the document were known to be based on inadequate information. Methods gained wide acceptance after their publication in 1974, but the need for periodic updates was recognized. In 1976, Transportation Research Board (TRB) committee A2A04 accepted responsibility for reviewing procedure efficiency. The minor changes were addressed and "Transportation Research Circular 191" was published in 1978.

NCHRP Project 22-2(4) initiated in 1979 was intended to address the major changes required in "NCHRP Report 183". The objective was to review, revise and expand the scope of "Circular 191" to reflect current technology. Final report was published as NCHRP Report 230 "Recommended Procedures for the Safety Performance Evaluation of Highway Safety Appurtenances" in 1980. This report served as the primary reference for full scale crash testing of highway safety appurtenances.

In 1987, AASHTO recognized the need to update Report 230. This was due to changes in vehicle fleet, emergence of many new designs, matching safety performance to levels of roadway utilization, new policies requiring use of safety belts, and advances in computer simulation and other evaluation methods. NCHRP Project 22-7 was initiated to update Report 230.

Efforts began in 1989 with a series of white papers. A panel met to discuss the issues, debate and develop a consensus on methods to be included in the update. The draft document was distributed for review, and the panel met two more times to discuss comments and to develop a final document. This document is NCHRP Report 350.

In 1997, NCHRP Project 22-14, "Improvement of the Procedures for the Safety-Performance Evaluation of Roadside Features", was initiated to determine the relevance and efficiency of procedures outlined in NCHRP Report 350. Upon completion in 2001, it was determined that NCHRP Report 350 should include updates to the following high priority topics:

- Test vehicles and specifications
- Impact conditions
- Critical impact point
- Efficacy of flair space model
- Soil type/condition
- Test documentation
- Working width measurement

In 2002, updates to NCHRP Report 350 were initiated through NCHRP Project 22-14(2). Upon completion in 2008, the revised crash testing methods were published as the 2009 *AASHTO Manual for Assessing Safety Hardware* (MASH). Key differences between MASH and Report 350 include the following:

- Presentation as a dual-unit document
- Changes in test matrices including impact angles, impact speeds, head-on tests with mid-size vehicles, and mandatory TMA tests that were previously optional
- Changes in test installations including performance-based specifications for soil, rail element splices, cable tensioning, and more-detailed documentation and requirements
- Changes in test vehicles including target vehicle weight and vehicle minimum center of gravity
- Changes in evaluation criteria including windshield damage, maximum roll and pitch angles, and required documentation on vehicle rebound for crash cushion tests
- Changes in test documentation and performance evaluation

Crash Test Criteria

Test requirements generally accepted at first were those contained in the National Cooperative Highway Research Program (NCHRP) Report 230 and in several earlier Transportation Research Board publications. In 1989, AASHTO published its "Guide Specifications for Bridge Railings," wherein not only were the required tests specified but they were categorized into three separate performance levels. A warrant selection procedure was also included for determining an appropriate performance level for a given bridge site. As the crash test criteria differed in some respects from Report 230, use of the "Guide Specification" was, and continues to be, optional.

In 1990, the FHWA identified a number of crash-tested railing systems that met the requirements of NCHRP Report 230 or one of the performance levels in the *AASHTO Guide Specifications*. At this point, the FHWA considered that any railing that was acceptable based on Report 230 testing could also be considered acceptable for use, at least as a PL-1 (performance level 1) as described by the *AASHTO Guide Specifications*. They also stated that any SL-1 (service level 1) railing developed and reported in NCHRP Report 239, "Multiple-Service-Level Highway Bridge Railing Selection Procedures," could be considered equivalent to a PL-1 railing.

In 1993, NCHRP Report 230 was superseded by NCHRP Report 350, "Recommended Procedures for the Safety Performance Evaluation of Highway Features." Its current testing criteria include provisions for six different test levels, all of which differ in some ways from the previous Report 230 tests, as well as those in the *AASHTO Guide Specifications*. No selection methods or warrants for the use of a specific test level are included in Report 350, although a separate research effort is underway to establish such warrants. Adding to the conflicting guidance for selection of an appropriate bridge railing system, the 1994 *AASHTO LRFD Bridge Design Specifications* were issued as an alternate to the long-standing *AASHTO Standard Specifications for Highway Bridges*. The 2010 *AASHTO LRFD Bridge Design Specifications* have six test levels that correspond to the six levels in Report 350.

In 2009, NCHRP Report 350 was superseded by *AASHTO* Manual for Assessing Safety Hardware (MASH). The updates contained in MASH represent major revisions to Report 350 including changes to testing vehicles, impact conditions, criteria used for evaluation, and the addition of newly approved traffic safety features. The implementation of MASH on the NHS includes the following:

- The AASHTO Technical Committee on Roadside Safety is responsible for developing and maintaining the evaluation criteria as adopted by AASHTO. FHWA is responsible for review and acceptance of highway safety hardware
- All highway safety hardware accepted prior to adoption of MASH using criteria contained in NCHRP Report 350 may remain in place and may continue to be manufactured and installed
- Highway safety hardware accepted using NCHRP Report 350 criteria is not required to be retested using MASH criteria
- If highway safety hardware that has been accepted by FHWA using NCHRP Report 350 criteria fails testing using MASH criteria, AASHTO and FHWA will jointly review the test results and determine a proper course of action

Current FHWA Policy

Bridge railings to be installed on National Highway System (NHS) projects must meet the acceptance criteria contained in NCHRP Report 350 (Figure 7.6.4) or AASHTO MASH (Figure 7.6.5). The minimum acceptable bridge railing for high-speed highways is a Test Level 3 (TL-3) unless supported by a rational selection procedure. For locations where the posted speed limit is less than 44 mph, a TL-2 bridge railing is considered acceptable.

Test Level	Impact Speed	Vehicle Type
TL-1	30 mph	1,800 lb car; 4,500 lb pickup
TL-2	45 mph	1,800 lb car; 4,500 lb pickup
TL-3	60 mph	1,800 lb car; 4,500 lb pickup
TL-4	60 mph 50 mph	1,800 lb car; 4,500 lb pickup 18,000 lb single unit truck
TL-5	60 mph 50 mph	1,800 lb car; 4,500 lb pickup 80,000 lb tractor trailer
TL-6	60 mph 50 mph	1,800 lb car; 4,500 lb pickup 80,000 lb tanker trailer

Figure 7.6.4 2010 *AASHTO LRFD Bridge Specifications* Test Level Index (based on the NCHRP Report 350 Test Level Index)

Test Level	Impact Speed	Vehicle Type
TL-1	31 mph	2,420 lb car; 5,000 lb pickup
TL-2	44 mph	2,420 lb car; 5,000 lb pickup
TL-3	62 mph	2,420 lb car; 5,000 lb pickup
TL-4	62 mph 56 mph	2,420 lb car; 5,000 lb pickup 22,000 lb single unit truck
TL-5	62 mph 50 mph	2,420 lb car; 5,000 lb pickup 79,300 lb tractor trailer
TL-6	62 mph 50 mph	2,420 lb car; 5,000 lb pickup 79,300 lb tanker trailer

Figure 7.6.5 2009 *AASHTO Manual for Assessment of Safety Hardware* (MASH) Test Level Index

Railings that have been found acceptable under the crash testing and acceptance criteria of NCHRP Report 350 or the *AASHTO LRFD Bridge Design Specifications* will be considered as meeting the requirements of AASHTO

MASH. This comparison of equivalencies has been tabulated by the FHWA in their November 20, 2009 memorandum on the implementation of AASHTO MASH.

The FHWA continues to encourage support for development of railing test level selection methods. New crash-tested railings continue to be approved and added, and their identity and features can be obtained from the FHWA Roadside Hardware Policy and Guidance website:

http://safety.fhwa.dot.gov/roadway_dept/policy_guide/road_hardware/

For non-NHS projects, the setting of criteria for establishing acceptability for bridge railings has been relegated by the FHWA to the individual states. Some states require conformity with the FHWA's NHS criteria for all bridges, on any of the highway systems. In other states, lesser performance criteria are accepted for bridges on non-NHS roads, so there may be variations between states as to safety feature acceptability.

Railing Evaluation Results/Resources

All of the bridge and longitudinal roadside barrier systems, transitions, and approach guardrail ends which have been found to meet the various crash test requirements of NCHRP Reports 350 and/or AASHTO MASH are identified on the FHWA Roadside Hardware Policy and Guidance website, which is located at:

http://safety.fhwa.dot.gov/roadway_dept/policy_guide/road_hardware/

This website includes acceptance letters as well as links to manufacturers' websites for information on proprietary systems. Listings for several categories of safety features are accessible. New listings of bridge barriers more recently tested may be found on the longitudinal barrier list, so a thorough search of all listings is advisable to identify a specific feature and its test results. The May 30, 1997 memorandum and its attached document with test level equivalencies for NCHRP 350 criteria can also be found on the website.

Longitudinal barriers specifically used as bridge barriers which meet current NCHRP Report 350 crash test performance criteria are found at:

www.fhwa.dot.gov/bridge/bridgerail/

The "2005 Bridge Rail Guide" can be found at this web site. This document contains photographs, drawings, test level, contact information and cost for the acceptable bridge rails per NCHRP Report 350 criteria.

Additional information can also be found in the current AASHTO "Roadside Design Guide" and in the current AASHTO MASH.

Available Training Courses

FHWA-NHI 380032A Roadside Safety Guide

This three-day course discusses the use of the *Roadside Design Guide* including applying the clear zone concept, identifying the need for a traffic barrier, recognizing unsafe roadside design features and elements.

FHWA-NHI 380079 AASHTO Roadside Design Guide – Web-based

This web-based course provides an overview of the *Roadside Design Guide* including applying the clear zone concept, identifying the need for a traffic barrier, recognizing unsafe roadside design features and elements.

FHWA-NHI 380034 Design, Construction, and Maintenance of Highway Safety Appurtenances and Features

This one-day course allows participants to identify advantages and disadvantages of different types of longitudinal barriers and crash cushions, identify NCHRP 350 tested safety appurtenances, and recognize substandard or potentially hazardous highway appurtenances or features.

FHWA-NHI 380034A Design, Construction, and Maintenance of Highway Safety Appurtenances and Features

This two-day course allows participants to identify advantages and disadvantages of different types of longitudinal barriers and crash cushions, identify NCHRP 350 tested safety appurtenances, and recognize substandard or potentially hazardous highway appurtenances or features.

FHWA-NHI 380034B Design, Construction, and Maintenance of Highway Safety Appurtenances and Features

This three-day course allows participants to identify advantages and disadvantages of different types of longitudinal barriers and crash cushions, identify NCHRP 350 tested safety appurtenances, and recognize substandard or potentially hazardous highway appurtenances or features.

The courses listed above can be found by using the following website link: http://www.nhi.fhwa.dot.gov/.

7.6.3 Identification and Appraisal

Identification of conforming and non-conforming bridge safety features will vary depending upon highway classification and the jurisdiction involved. With various acceptance criteria to consider and with continuing crash testing and approvals of new barriers, it is advisable to rely on the most current specific acceptance criteria for the particular state or jurisdiction within which a bridge is located. Obtain a listing of currently conforming versus non-conforming bridge safety features for each jurisdiction prior to identification and appraisal of these features in the course of bridge inspections within that jurisdiction.

Appraisal Coding

The FHWA *Recording and Coding Guide for the Structure Inventory and Appraisal of the Nation's Bridges* (*Coding Guide*) requires an evaluation and reporting as to whether each of the four basic components satisfactorily conform to current safety design criteria for the respective component.

Document the condition of the safety features in the inspection report even though the condition is not considered in the appraisal coding. After determining whether the safety features at the site are acceptable, assign an appraisal code. The FHWA *Coding Guide* contains four entries for safety features: one each for the bridge railing, transition, approach guardrail, and approach guardrail ends. Some states have modified and set different coding standards.

After making the determination as to whether or not safety features at the site meet currently acceptable standards, the inspector assigns an appraisal code of either 1 (meets) or 0 (does not meet) or N (Not applicable or a safety feature is not required*) for each element of Item 36 (page 19), FHWA *Coding Guide*:

36A Bridge railings
36B Transitions
36C Approach guardrail
36D Approach guardrail ends

* For structures on the NHS, national standards are set by federal regulation. For those not on the NHS, it shall be the responsibility of the highway agency (state, county, local or federal) to set standards.

While there is only one safety features coding for each element, there are at least two bridge railings and up to four approach guardrail treatments. Therefore, code the worst situation for each element even though they may occur at different locations on the bridge.

The following descriptions of Appraisal Items 36A – 36D are for bridge sites on the National Highway System (NHS). Local bridge owners may set different criteria to evaluate Items 36A – 36D.

36A Bridge Railings

Factors that affect the appraisal ratings of NHS bridge railings, Item 36A, include height, material, strength and geometric features (see Figure 7.6.6). The railing must be able to smoothly redirect the impacting vehicle. Evaluate the bridge railings using the current *AASHTO LRFD Bridge Design Specifications* for specific geometric criteria and static loading. The railings must be crash tested as per FHWA policy (see Figure 7.6.7). If the railings meet these criteria, they are considered acceptable. Other railings that have been crash tested but do not meet current requirements are considered unacceptable.

Figure 7.6.6 Acceptable Bridge Rail

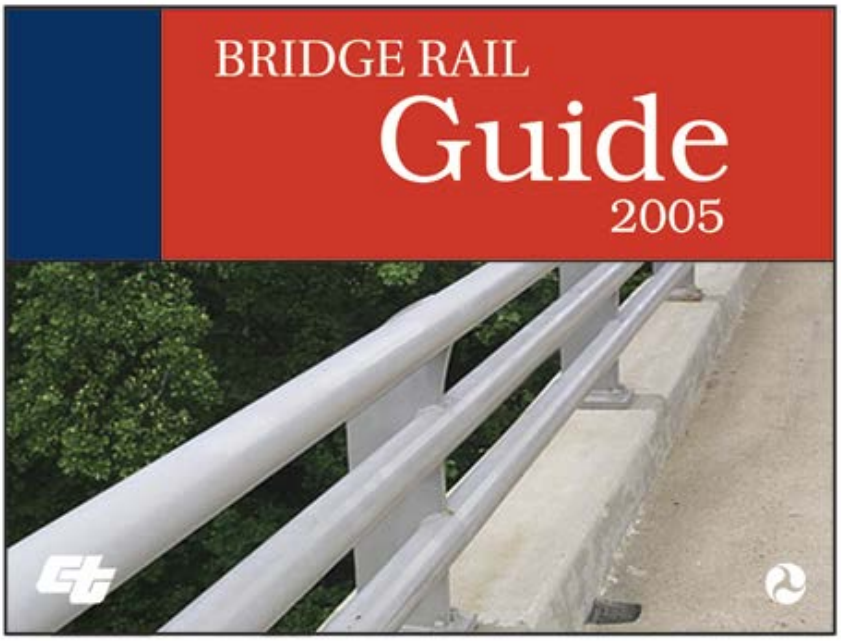

Figure 7.6.7 Bridge Rail Guide

36B Transitions

Appraisal Item 36B, transitions, requires the transition from the approach guardrail to the bridge railing be firmly attached to the bridge rail and gradually stiffened as it approaches the bridge rail (see Figure 7.6.8). Transition stiffening is usually accomplished through use of:

- Decreased post spacing
- Increased post size
- Embedment of posts in concrete bases
- Increased rail thickness, using a thicker gage rail element or by nesting two layers

Figure 7.6.8 Acceptable Transition

The ends of curbs or safety walks are currently designed to gradually taper out or be shielded. Vehicle snagging is reduced by providing an increased rail surface projection with either a broader rail face (e.g., thrie beam) or a rub rail being placed beneath the primary rail, to minimize both guardrail post and bridge endpost exposure as potential snag points.

Older transitions usually have some of the essential features but are often lacking all current acceptable features. There may be guardrail anchorage to the bridge but insufficient stiffening, or perhaps some degree of stiffening but insufficient concealment of potential snag points such as the front corner of the bridge railing or exposed guardrail posts. Cable connections to the bridge railing do not meet minimum criteria because they do not provide a smooth stiffened transition. Timber approach rail attached to the bridge rail is not an acceptable transition on the NHS. No transition is provided at all when the bridge railing and approach guardrail are not structurally connected.

36C Approach Guardrail Because the need for a barrier generally does not stop at the end of the bridge, the approach guardrail, Item 36C, is evaluated for adequacy. Evaluate the structural adequacy and design compatibility of the approach rail and transition. The approach guardrail must be of adequate length and strength to shield motorists from the hazards at the bridge site. The guardrail is designed to safely redirect the impacting vehicle without snagging or pocketing. Acceptable design suggestions may be found in the *AASHTO Roadside Design Guide*, subsequent AASHTO guidelines, or the previously referenced FHWA website.

The strong post (steel or wood) W-beam guardrails with wood or approved plastic blocks (see Figure 7.6.9) are examples of systems meeting the requirements of Test Level 3, as are the strong post thrie-beam systems. The same W-beam barriers used with a steel block are included for Test Level 2. See Topic 7.6.2 for detailed explanation of the various test levels.

Figure 7.6.9 Approach Guardrail System and Approved Plastic Offset Block

Post and cable systems do not meet minimum criteria for bridge approach guardrail systems because they allow both snagging and pocketing of a vehicle upon impact. Timber approach guardrail does not meet minimum criteria for strength, continuity, or performance for bridges on the NHS.

36D Approach Guardrail Ends

Evaluate approach guardrail ends, Item 36D, for adequacy. A variety of approach guardrail ends have been approved for use by the FHWA. The specific installation is dependent on various roadway features and testimony methods as administered by the National Cooperative Highway Research Program (NCHRP). Current listings of crash tested approach guardrail ends and documentation of their performance can be found at:

http://safety.fhwa.dot.gov/roadway_dept/policy_guide/road_hardware/barriers/term_cush.cfm

Probably the most universally effective is the buried-in-back-slope treatment where the longitudinal barrier is introduced from a buried anchorage, typically from a cut slope preceding the bridge approach guardrail installation (see Figure 7.6.10). Essential for these installations are keeping a constant rail height relative to the roadway grade and then provision of both a rub rail and an anchorage capable of developing the full strength of the W-beam rail.

Figure 7.6.10 W-Shaped Guardrail End Flared and Buried into an Embankment

Flaring the guardrail end to reduce the likelihood of a vehicular impact is only effective if there is enough space for a substantial flare from the edge of traveled way. The guardrail must be flared beyond the clear zone which is the area beyond the traveled way available for vehicle recovery. This area may consist of shoulder, recoverable or non-recoverable slope, and/or clear run-out area. The required width depends on traffic volume, speed, and roadside geometry.

Burying the guardrail end has been used with and without flaring. If the guardrail end is turned down for burying without flaring, it has frequently produced rollover accidents and is not currently considered an acceptable approach guardrail end for high speed/high volume roadways.

One of several breakaway treatments can be used. The approach guardrail end is modified to permit safe penetration through the system for end impacts, yet effective redirection of vehicles for impacts slightly after of the approach guardrail end.

The last method for railing approach guardrail end is shielding of the barrier with an energy-absorbing or attenuating system which dissipates impact energy as an impacting vehicle is gradually brought to a stop before reaching a rigid bridge rail endpost. Though vehicle damage may be severe, deceleration is controlled within tolerable limits to minimize occupant injury.

A variety of impact attenuators have been used, including expendable sand-filled containers, which shatter and absorb energy during impacts. There are also more elaborate telescoping fender systems, which redirect side impacts but also telescope and attenuate crash energy through crushing of replaceable foam-filled cartridges for direct impacts. Older versions absorbed energy through expulsion of water from water-filled tubes as the device collapsed. Most parts for these more elaborate devices are reusable, making them very suitable for approach guardrail end locations where frequent impacts might be expected. This information can be found at:

http://safety.fhwa.dot.gov/roadway_dept/policy_guide/road_hardware/barriers/term_cush.cfm

In certain cases, such as at the trailing end of a one-way bridge, guardrail is not required at all since it will not prevent motorist from impacting what is under the bridge.

A type of approach guardrail end, which has sometimes been called a boxing glove, is not a current acceptable approach guardrail end unless properly flared away from the traveled way. If the guardrail ends are left unprotected, this is also unacceptable (see Figure 7.6.11).

Figure 7.6.11 Unacceptable Blunt Ends

7.6.4 Safety Feature Inspection

The inspection of bridge safety features involves evaluation of the condition of the bridge railing, the transition, the approach guardrail, and approach guardrail ends leading from the bridge, the guardrail system leading from the approach roadway to the bridge end, and whether these two systems will likely function acceptably together to safely contain and redirect errant vehicles which may collide with them.

For structures which are over roadways, the adequacy and condition of traffic safety features for both the upper and lower roadways are to be evaluated during the inspection, but only the adequacy of the safety features for the roadway carried by the bridge is coded for Items 36A-36D.

Inspection

Criteria considered during the inspection of the bridge railing are the height, material, strength, geometric features, and the likelihood of acceptable crash test performance. See Topic 7.6.3 for the appraisal coding of Items 36A – 36D. Keep in mind that only the appraisal coding and the design of the traffic safety feature is addressed in Items 36 A – 36D. Record deficiencies due to the condition separately in the inspection notes.

Many state agencies have developed their own acceptance guidelines for bridge railings. Familiarize yourself with agency guidelines and standards for your state.

Bridge Railing

Comparison of existing bridge railing systems with approved crash-tested designs will establish their acceptability and crash worthiness.

Metal bridge railings should be firmly attached to the deck or superstructure and should be functional. Check especially for corrosion and collision damage, which might render these railings ineffective (see Figure 7.6.12). Check for loose or missing connections.

Concrete bridge railing is generally cast-in-place and engages reinforcing bars to develop structural anchorage in the deck or slab. Verify that the concrete is sound and that reinforcing bars are not exposed. Inspect for impact damage or rotation, and note areas of damage or movement.

Check for evidence of anchorage failure in precast parapets. Perform a physical examination by sounding exposed anchor bolts with a hammer. Check for separations between the base of the precast units and deck, or evidence of active water leakage between parapet and deck. Some states are removing all precast parapets because water is seeping in along the curb line and corroding reinforcement. This reinforcement can not be visually inspected.

Inspect post and beam railing systems for collision damage and deterioration of the various elements. Check post bases for loss of anchorage. The exposed side of the railing must be smooth and continuous.

For a through truss or arch configuration, separate traffic from structural members, especially fracture critical members, with an adequate railing system to prevent major structural damage to the bridge and protect vehicles.

If add-on rails are other than decorative or for pedestrians, their structural adequacy can again be verified by comparison with successfully crash tested designs.

Figure 7.6.12 Deficiency Steel Post Bridge Railing

Approach Guardrail

For approach guardrails, verify that agency guidelines or standards are met. Make note of rail element type, post size and post spacing for comparison with approved designs to verify acceptability of the guardrail system. Note any areas where the railing may "pocket" during collision, causing an abrupt deceleration or erratic rebound.

Document any significant collision damage, which is evident (see Figure 7.6.13). Report posts which are displaced horizontally. Note any deficiency of guardrail elements, which could weaken the system. Check for cracks, rust or breakage of elements. Check wood posts for rot or insect damage, especially at the ground line. The connection between rails and posts should be secure and tight. Note any loose or missing bolts.

Check the approach rail for proper alignment. Note any area of settlement or frost heave. Posts embedded in the ground should not be able to be moved by hand. Check the slope beyond the posts for settlement or erosion which may reduce embedment of the posts (see Figure 7.6.14).

Unless specifically designed for impact, timber approach guardrail does not meet minimum criteria for strength on NHS roadways.

Figure 7.6.13 Approach Guardrail Collision Damage

Figure 7.6.14 Erosion Reducing Post Embedment

Transition

Check the approach guardrail transition to the bridge railing for adequate structural anchorage to the bridge railing system. Check for sufficiently reduced post spacing to assure stiffening of the guardrail at the approach to the rigid bridge rail end. Check for smooth transition details to minimize the possibility of snagging an impacting vehicle, causing excessive deceleration. For nested

installations, be sure that the approach rail is properly nested with the lap splice away from the direction of traffic (see Figure 7.6.15). Also check railing, post and offset bracket condition. Check the condition of the transition and look for material deficiencies similar to bridge railings and approach guardrails.

Timber should not be used for the rails in transitions on the National Highway System (NHS).

Figure 7.6.15 Proper Nesting of Guardrail at Transition

Approach Guardrail End

Note the type, condition, and suitability of any approach guardrail end. Acceptable crash-tested approach guardrail ends are identified in the *AASHTO Roadside Design Guide* or with current FHWA issuances. Check impact attenuation devices adjacent to bridge elements for evidence of damage due to collision and that the energy absorbing elements have not ruptured (see Figure 7.6.16). Ensure that any cables and anchorages are secure and undamaged. Check for material deficiencies that may affect the condition of the approach guardrail end.

Approach guardrail ends may not be required on the trailing end of a one-way bridge.

Figure 7.6.16 Impact Attenuator

Inspection for Non-NHS Bridges

The requirements for inspection of traffic safety features presented in this topic are applicable to bridges on the National highway System (NHS). For bridges which are not located on the NHS, it is up to each governing agency to set their own policies.

There are still various requirements that should be met as a minimum for these installations. The bridge rail must be crashworthy. The approach guardrail must be adequately connected to the bridge rail. Post spacing from the approach guiderail to the transition should be reduced to limit deflection. It is recommended to have nested rail at the transition, but it is not absolutely necessary. Approach guardrail ends should be crash worthy with no blunt ends. Existing turned down ends and breakaway cable terminal (BCT) approach guardrail ends are acceptable if governing policy is so stated. Crash worthy approach guardrail ends would be better, but may not be cost effective on low volume, low speed roads.

Figure 7.6.17 Timber Traffic Safety Features, Rocky Mountain National Park

7.6.5 Median Barriers

Median barriers are used to separate opposing traffic lanes when the average daily traffic (ADT) on the road exceeds a specified amount. They are usually found on high speed, limited access highways.

The most commonly used median barrier on bridges is the concrete median barrier. This is a double sided parapet, and it should meet the current criteria for the crash testing of bridge railing. The only acceptable approach guardrail end for a concrete median barrier is an impact attenuator.

Double-faced steel W-beam or thrie beam railing on standard heavy posts are also used for median barriers.

Inspection of Median Barriers

Median barriers should be firmly attached to the deck, and they should be functional. They should meet the requirements for Item 36A, bridge railing. Inspect for collision damage and attachment to any additional safety features. Check for deterioration and spalling on concrete median barriers, and examine for corrosion and loose connectors on steel railings and posts.

7.6.6 Evaluation

State and Federal rating guideline systems have been developed to aid in the inspection of bridge railings. The two major rating guideline systems currently in use are the FHWA *Coding Guide* used for the National Bridge Inventory (NBI) component condition rating method and the *AASHTO Guide Manual for Bridge Element Inspection* used for element level condition state assessment.

NBI Component Condition Rating Guidelines

Bridge railings do not impact the deck rating, but their condition can be described on the inspection form. Record deficiencies in bridge railings on the inspection and maintenance sheets.

Element Level Condition State Assessment

In an element level condition state assessment of bridge railings, possible AASHTO National Bridge Elements (NBEs) and Bridge Management Elements (BMEs) are:

NBE No.	Description
330	Metal Bridge Railing
331	Reinforced Concrete Bridge Railing
332	Timber Bridge Railing
333	Other Bridge Railing
334	Masonry Bridge Railing

BME No.	Description
515	Steel Protective Coating
521	Concrete Protective Coating

The unit quantity for bridge railings is feet. The total length is distributed among the four available condition states depending on the extent and severity of the deficiency. For protective coatings, the unit quantity is square feet, with the total area distributed among the four available condition states depending on the extent and severity of the deficiency. The sum of all condition states equals the National Bridge Element or Bridge Management Element. Condition state 1 is the best possible rating. See the *AASHTO Guide Manual for Bridge Element Inspection* for condition state descriptions.

The following Defect Flags may be applicable in the evaluation of bridge railings:

Defect Flag No.	**Description**
356	Steel Cracking/Fatigue
357	Pack Rust
358	Concrete Cracking
359	Concrete Efflorescence
363	Steel Section Loss

See the AASHTO *Guide Manual for Bridge Element Inspection* for the application of Defect Flags.

Inspection and Evaluation of Bridge Decks -Quiz

Updated: 12/23/2018

1) In a timber deck, most decay occurs on the outside of a timber member.

a. true

b. false

2) What type of timber deck involves post-tensioning high-strength steel bars with a hydraulic jacking system?

a. plank decks

b. stressed-laminated decks

c. nailed-laminated decks

d. glued-laminated deck panels

3) The best way to protect wood decks against decay is to use _____.

a. preservatives

b. water repellants

c. fumigants

d. paint

4) For use on timber decks, _____ paints provide the best barrier from moisture.

a. oil-alkyd

b. oil-based

c. latex-based

d. water-based

5) The most common bridge deck material is _____.

a. timber

b. concrete

c. steel

d. asphalt

6) Studs, spirals, channels, and stirrups are examples of _____.

a. shear connectors

b. elements of the deck drainage system

c. hardware to facilitate lifting decking structures into place

d. types of steel reinforcement

7) The primary cause of deterioration of concrete decks is _____.

a. concrete efflorescence

b. crumbling of the concrete surface caused by traffic

c. concrete spalling

d. corrosion of the reinforcing steel

8) On a multi-beam bridge and a stringer type floor system, the primary deck reinforcement is parallel to the direction of traffic.

a. true

b. false

9) Low-slump dense-concrete overlaid bridge decks will require resurfacing after about _____ years of service.

a. 10

b. 15

c. 20

d. 25

10) What is the most common overlay material for concrete decks?

a. fiber reinforced polymer

b. asphalt

c. fiber reinforced concrete

d. latex concrete

11) The three types of FRP composite decks are honeycomb sandwich, solid core sandwich, and _____.

a. trapezoidal sandwich

b. hollow core sandwich

c. rectangular sandwich

d. diamond sandwich

12) The most common overlay material for FRP decks is _____.

a. epoxy polymer

b. thin polymer-concrete

c. asphalt

d. none of the above

13) Why do fiber-reinforced polymer decks require an overlay?

a. for protection against ultraviolet light

b. for protection against rain and snow

c. because of the low skid resistance of the material

d. to allow striping to adhere

14) The primary inspection method for FRP decks is _____.

a. tap testing using a hammer

b. tap testing using an electronic tapping device

c. ultrasonic testing

d. visual inspection for surface deficiencies

15) The FHWA's *Recording and Coding Guide for the Structural Inventory and Appraisal of the Nation's Bridges* is used for element level condition state assessment.

a. true

b. false

16) What is the condition rating of an FRP deck structure (Figure 7.3.10) corresponding to a condition of “serious”?

a. 1

b. 2

c. 3

d. 4

17) Steel bridge decks are mainly used when _____ is a major factor.

a. weight

b. strength

c. appearance

d. resistance to wear

18) Orthotropic, buckle plate, and grid are examples of _____ decks.

a. timber

b. steel

c. concrete

d. fiber reinforced polymer

19) An advantage of using grid decks on rehabilitated bridges is that the low weight of the grid deck reduces the dead load on the bridge.

a. true

b. false

20) In welded steel grid decks, _____ bars are field-welded or bolted to the superstructure.

a. supplementary

b. grating

c. bearing

d. tertiary

21) Exodermic decks generally weigh _____ less than precast reinforced concrete decks.

a. 35% to 50%

b. 50% to 65%

c. 25% to 35%

d. 15% to 25%

22) How many coats of paint are usually applied to a steel deck?

a. None (steel decks are not painted)

b. 1

c. 2

d. 3

23) In most bridges, the function of deck joints is to _____.

a. to accommodate the expansion, contraction and rotation of the deck and superstructure

b. provide a smooth transition from the approach roadway to the bridge deck

c. prevent runoff from reaching bridge elements below the surface of the deck

d. all of the above

24) To what does the term "navigational lighting" refer?

a. lane control signals

b. lighting used for the safe control of waterway traffic under a bridge structure

c. lighting used to increase visibility for traffic crossing the bridge

d. lighting of traffic signs

25) Open expansion joints are common on _____.

a. short span bridges with steel decks

b. timber bridges

c. short span bridges with concrete decks

d. long span bridges with concrete decks

26) The largest movement that finger plate joints are used to accommodate is _____ inches.

a. 4

b. 12

c. 16

d. over 24

27) Scuppers are incorporated in _____ systems.

a. outlet pipe

b. drainage trough

c. downspout pipe

d. inlet

28) What lights usually indicate the center of a channel?

a. three white lights arranged vertically

b. red lights placed on the bottom of the superstructure

c. red lights placed on the nearest pier

d. green lights placed at the bottom midspan of the superstructure

29) The design of bridge railing systems and bridge approach guardrail systems is intended first to _____.

a. prevent rollover

b. provide vehicular containment and redirection

c. minimize snagging and the possibility of vehicle spinout

d. provide smooth vehicular redirection parallel with the barrier system

30) If, on impact, a redirective device undergoes relatively large lateral displacements within a relatively short longitudinal distance, _____ is said to have occurred.

a. restraint system failure

b. abrupt vehicular arrest

c. snagging

d. pocketing

31) Bridge railing systems must be successfully crash tested and approved to be considered acceptable for use on Federal-aid projects.

a. true

b. false

32) For locations where the posted speed limit is less than _____ mph, a TL-2 bridge railing is considered acceptable.

a. 30

b. 44

c. 55

d. 70

33) Why don't post and cable systems meet minimum criteria for bridge approach guardrail systems?

a. because they allow both snagging and pocketing of a vehicle upon impact

b. because they do not meet minimum criteria for strength

c. because they do not meet minimum criteria for continuity

d. because they do not meet minimum criteria for performance

34) Why is turning down the guardrail end for burying without flaring not currently considered an acceptable end treatment?

a. It produces snagging of a vehicle upon impact.

b. It has frequently produced rollover accidents.

c. It produces pocketing of a vehicle upon impact.

d. It does not meet minimum criteria for strength.

35) Guardrail is always required at the trailing end of a one-way bridge.

a. true

b. false