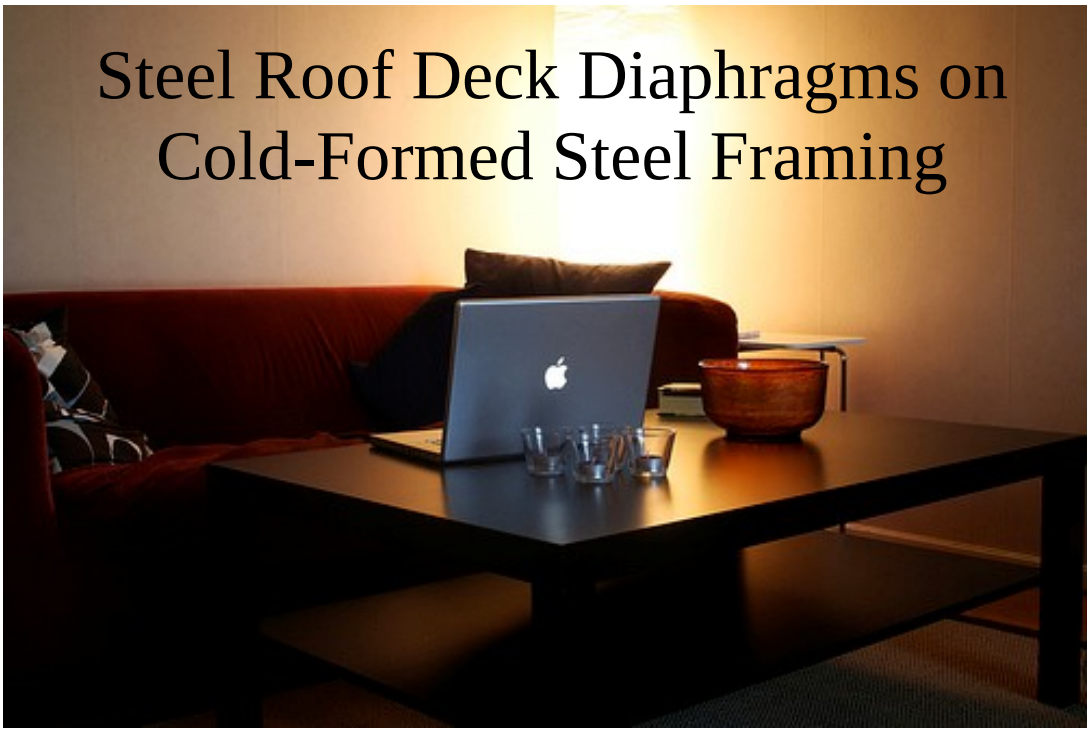

Steel Roof Deck Diaphragms on Cold-Formed Steel Framing

By

Thomas Sputo, Ph.D., P.E.

PDHLibrary Course No 0007188
2 PDH HOURS

Steel Roof Deck Diaphragms on Cold-Formed Steel Framing

Thomas Sputo, Ph.D., P.E., S.E., SECB

Introduction

This paper addresses the design of steel roof deck diaphragms on cold-formed roof framing, either rafters or trusses, as shown in Figure 1. Criteria for design strength and stiffness of plywood diaphragms on cold-formed framing are available from several sources, but no equivalent resource exists for steel deck on cold-formed framing. Basic diaphragm theory is well established and is readily available in the Steel Deck Institute *Diaphragm Design Manual* (SDI, 2004) and the Metal Construction Association *Primer on Diaphragm Design* (MCA, 2004). This paper will not repeat this theory, and the reader is directed to these two publications for this basic information.

This paper will address the modifications that are needed to the basic SDI diaphragm theory to develop diaphragm design tables that account for the properties of the supporting framing. The tables contained in the *Diaphragm Design Manual* (SDI, 2004) assume support framing that is thick enough such that the behavior of the fastener in the support framing does not control. This paper will provide tables for screw-connected diaphragms of standard 1-1/2" steel roof deck on 33 mil and 43 mil support framing. Design tables assume lower bound material properties and industry standard thicknesses as shown in Table 1. No. 10 screws (d = 0.190 in) are assumed for sidelap fasteners and No. 12 (d = 0.216 in) or 14 (d = 0.250 in) screws are assumed for support fasteners. Screw fasteners shall conform to ASTM C1513. Proper detailing of the diaphragm to carry in-plane forces into and out of the diaphragm is assumed.

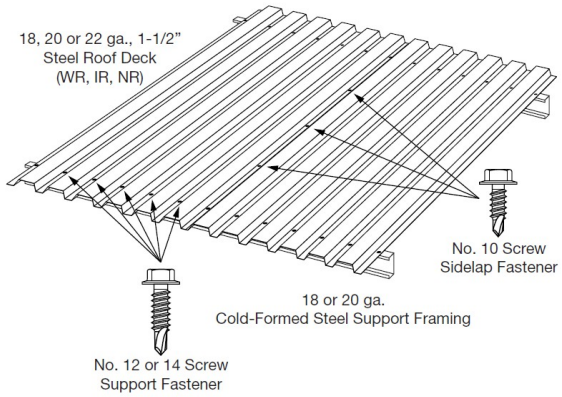

Figure 1. Steel Deck on Cold-Formed Framing

Table 1. Material Properties

		Design Thickness (in.)	Fy (ksi)	Fu (ksi)
Deck	22 gage	0.0295	33	45
Deck	20 gage	0.0358	33	45
Deck	18 gage	0.0474	33	45
Framing	20 gage	0.0346	33	45
Framing	18 gage	0.0451	33	45

Screw Strength

SDI (2004) equations for screw strength in support steel assume a minimum thickness of the support of 0.0385 inches. Because of this limitation, the screw strength equations contained in the AISI *North American Specification for the Design of Cold-Formed Steel Structural Members* (AISI, 2007) are used for this application.

Q_f = P_{ns} (per AISI (2007), E4.3.1)

The SDI (2004) criterion for stitch screw strength is used

Q_s = 115 d t

Screw Flexibility

The SDI (2004) equations for support screw flexibility do not consider the thickness of the support material. MCA (2004) provides a rational modification to the SDI equation that includes the thickness of the support framing when the support framing is less than 0.0478 inches in thickness. This equation applies for all load tables in this paper.

$$S_f = \{1.3 + (3.0-1.3)[(0.0478 - t_s)/(0.0478-t)]\} / (1000\ t^{0.5})$$

When the support thickness is greater than 0.0478 inches in thickness, the SDI (2004) equations may be used

$$S_f = 1.3 / (1000\ t^{0.5})$$

The SDI (2004) criterion for stitch screw flexibility is used

$$S_s = 3.0 / (1000\ t^{0.5})$$

Diaphragm Shear Stiffness

Using the SDI (2004) method, the diaphragm shear stiffness, assuming a deck span of 3 or more spans, is as follows

$$G' = K_2 / \{K_4 + (0.3D_{xx}/L_v) + (3K_1L_v)\}$$

The value of K_1 is found in the load tables (Tables 6-11), while the values of D_{xx}, K_2, and K_4 are found in Tables 2 and 3.

Table 2. K_2 and K_3

Deck Gage	K_2	K_4
22	870 kip/in	3.78
20	1056 kip/in	3.78
18	1398 kip/in	3.78

Table 3. Deck Warping Constant, Dxx (ft)

Deck Profile	Fastener Pattern *	22 Gage	20 Gage	18 Gage
WR	36/9	129	97	63
IR		226	169	111
NR		356	266	175
WR	36/7	129	97	63
IR		226	169	111
NR		356	266	175
WR	36/5	758	567	372
IR		886	663	435
NR		974	728	478
WR	36/4	1072	802	526
IR		1216	909	597
NR		1286	959	630
WR	36/3	2209	1652	1084
IR		2428	1816	1192
NR		2442	1827	1199
WR	30/6	129	97	63
IR		226	169	111
NR		356	266	175
WR	30/4	1377	1030	676
IR		1547	1157	760
NR		1608	1202	789
WR	30/3	1754	1312	861
IR		1943	1453	954
NR		1978	1480	971

* See SDI (2004) for fastener pattern types

Load Tables

Load tables are presented in the SDI (2004) format that is familiar to engineers designing steel deck diaphragms on hot rolled framing. Load tables were developed for 18, 20, and 22 gage, 1-1/2" steel roof deck on 18 gage and 20 gage support framing. No. 12 or 14 screws used as support fasteners are installed per fastener layouts shown in Figure 1. All calculations are conservatively based on No. 12 screws. The number of No. 10 sidelap screws per deck span are indicated in the tables. Load tables are as indicated in Table 4.

Table 4. Diaphragm Load Tables

Table No.	Deck Ga.	Framing Ga.	t_2/t_1	Q_f (lbs)	S_f (in/kip)	Q_s (lbs)	S_s (in/kip)
6	18	18	0.95	841	0.0145	1018	0.0138
7	20	18	1.26	858	0.0118	769	0.0159
8	22	18	1.53	774	0.0076	633	0.0175
9	18	20	0.73	565	0.0180	1018	0.0138
10	20	20	0.97	565	0.0164	769	0.0159
11	22	20	1.17	589	0.0142	633	0.0175

The tables provide nominal capacities as limited by shear strength and panel buckling. Applicable resistance factors (Φ) and safety factors (Ω), in accordance with AISI (2007) are as shown in Table 5.

Table 5. Resistance and Safety Factors

		Φ (LRFD)	Ω (ASD)
Panel Shear Strength	Seismic	0.65	2.50
	Wind	0.70	2.35
	Other	0.65	2.50
Panel Buckling	All	0.80	2.00

The design capacity of the diaphragm is the lesser of the shear strength and panel buckling capacities.

Design Example 1 - Seismic

Using allowable strength design (ASD), select a diaphragm for an in-plane seismic load of 330 plf, assuming 18 gage framing at 4 foot on center and 22 gage WR steel roof deck. Steel deck panels are 36 inches wide.

Referring to Table 8, select a 36/7 fastener pattern. Assuming 4 sidelap fasteners per span, check the panel shear strength:

S = 330 plf

S_n = 860 plf

Ω = 2.50 (seismic)

S_n / Ω = 860 / 2.50 = 344 plf > 330 plf OK

Next, check panel buckling

S_n = 3205 plf

Ω = 2.00

S_n / Ω = 3205 / 2.00 = 1602 plf > 330 plf OK

(Note: Panel buckling will rarely control design for most reasonable configurations)

The panel stiffness is calculated as follows

K_1 = 0.239 ft^{-1} (Table 8)

K_2 = 870 kip/in (Table 2)

K_4 = 3.78 (Table 2)

D_{xx} = 129 ft (Table 3)

L_v = 4 foot

G' = 870 / {3.78 +(0.3 x 129/4) +(3 x 0.239 x 4)} = 53.3 kip/in

Diaphragm deflections are calculated using rational design methods. Refer to SDI (2004) for additional information and design examples.

Other combinations of deck thickness and fastener spacing are possible.

Design Example 2 - Wind

Using allowable strength design (ASD), select a diaphragm for an in-plane wind load of 120 plf combined with 30 psf uplift, assuming 18 gage framing at 4 foot on center and 22 gage WR steel roof deck. Steel deck panels are 36 inches wide.

Referring to Table 8, select a 36/7 fastener pattern. Assuming 4 sidelap fasteners per span, check the panel shear strength:

S = 120 plf

S_n = 860 plf

Ω = 2.35 (wind)

S_n / Ω = 860 / 2.35 = 366 plf > 120 plf OK

Next, check panel buckling

S_n = 3205 plf

Ω = 2.00

S_n / Ω = 3205 / 2.00 = 1602 plf > 120 plf OK

(Note: Panel buckling will rarely control design for most reasonable configurations)

Next, check fastener uplift capacity, using No. 12 support screws (d = 0.216 in; d_h = 0.432 in)

T_n = 373 pounds (pullout) Controls

T_n = 860 pounds (pullover) [Screw pullout and pullover calculated per AISI (2007)]

T_n / Ω = 373 / 3.0 = 124 pounds

k = 5(interior fasteners) + 2(edge fasteners)/2(shared) = 6.0

β = k / panel cover = 6.0 / 3 feet

= 2.0

T = w_{up} (L_v/ β) = 30 (4/2.0)

= 60 pounds per screw

[Screw contributions k and β calculated per SDI (2004)]

Check interaction of uplift and shear per SDI (2004) criteria for combined shear and pullout on screw

$(\Omega T / T_n) + 0.85(\Omega S / S_n) < 1.0$ (ASD)

(60/124) + 0.85 (120/366) = 0.76 OK

Note 1: Interaction of screw pullout with shear for LRFD is:

$(T_u / \Phi T_n) + 0.85(S_u / \Phi S_n) < 1.0$

Note 2: For interaction of screw pullover with shear, refer to AISI (2007) Section E4.5

The panel stiffness is calculated as for Design Example 1. Other combinations of deck thickness and fastener spacing are possible.

Nomenclature

d	=	Screw major diameter, inches
d_h	=	Screw head diameter, inches
D_{xx}	=	Panel warping constant, feet
G'	=	Diaphragm shear stiffness, kip/inch
k	=	Effective number of support fasteners per panel width
L_v	=	Panel span, feet
P_{ns}	=	Nominal shear strength (resistance) per screw
Q_f	=	Support fastener strength, kips
Q_s	=	Sidelap fastener strength, kips
S	=	Required allowable diaphragm shear strength, pounds (ASD)
S_f	=	Support fastener flexibility factor
S_n	=	Nominal shear strength of diaphragm, pounds
S_s	=	Sidelap fastener flexibility factor
S_u	=	Required design shear strength of diaphragm, pounds (LRFD)
T	=	Required allowable uplift capacity of screw, pounds (ASD)
T_n	=	Nominal uplift capacity of screw, pounds
T_u	=	Required design uplift capacity of screw, pounds (LRFD)
t	=	Deck thickness, inches
t_s	=	Support framing thickness, inches
t_1	=	Deck thickness in contact with screw head or washer, inches
t_2	=	Support framing thickness not in contact with screw head or washer, inches
w_{up}	=	Uplift on deck, psf
β	=	Fastener pattern factor
Φ	=	Resistance factor (LRFD)
Ω	=	Safety factor (ASD)

References

American Iron and Steel Institute (AISI) (2007). *North American Specification for the Design of Cold-Formed Steel Structural Members and Commentary*, Washington DC.

ASTM C1513 - 04(2009)e1 *Standard Specification for Steel Tapping Screws for Cold-Formed Steel Framing Connections*.

Metal Construction Association (MCA) (2004). *Primer on Diaphragm Design, 1st Edition*, Glenview, IL.

Steel Deck Institute (SDI) (2004). *Diaphragm Design Manual, 3rd Edition*, Fox River Grove, IL.

1.5(WR,IR,NR)	t=design thickness= 0.0474 in.	18 Gage	Φ(EQ): 0.65	Ω(EQ): 2.50
Support Framing	t=design thickness= 0.0451 in.	18 Gage	Φ(WIND): 0.70	Ω(WIND): 2.35
SUPPORT FASTENING:	#12 or #14 screws		Φ(Other): 0.65	Ω(Other): 2.50
SIDE-LAP FASTENING:	#10 screws			

FASTENER LAYOUT	SIDE-LAP CONN/SPAN	MAXIMUM NOMINAL SHEAR STRENGTH, PLF SPAN, FT 2.0	3.0	4.0	5.0	6.0	7.0	8.0	9.0	10.0	K1
36/9	0	1155	860	675	540	445	375	325	285	255	1.129
	1	1380	1080	870	720	615					0.739
	2	1530	1255	1040	875	755	660	580	510		0.549
	3	1635	1390	1180	1015	880	775	690	625	560	0.437
	4	1710	1495	1300	1135	995	885	795	715	655	0.363
	5	1760	1575	1395	1235	1100	985	885	805	735	0.310
	6	1800	1640	1475	1325	1190	1075	975	890	815	0.271
36/7	0	775	550	420	335	275	235	200	180	160	1.693
	1	1065	810	640	525	445					0.945
	2	1255	1010	825	690	590	515	455	405		0.656
	3	1375	1160	975	835	720	635	565	510	460	0.502
	4	1455	1270	1100	955	840	745	665	605	550	0.407
	5	1510	1355	1200	1060	945	845	760	690	635	0.342
	6	1545	1415	1275	1150	1035	935	850	775	710	0.295
36/5	0	655	485	380	310	255	215	185	165	145	2.031
	1	855	690	570	475	410					1.042
	2	955	825	710	610	535	475	425	380		0.701
	3	1010	910	810	720	640	575	520	470	430	0.528
	4	1045	965	880	800	725	660	600	550	505	0.424
	5	1065	1000	930	860	790	730	670	620	575	0.354
	6	1075	1030	970	905	845	785	730	680	635	0.304
36/4	0	500	375	290	235	190	160	140	120	110	2.540
	1	675	560	470	400	345					1.162
	2	750	665	585	515	460	410	370	335		0.753
	3	785	725	660	600	545	495	455	415	385	0.557
	4	800	760	710	660	610	565	520	485	450	0.442
	5	815	780	745	700	660	615	575	540	505	0.366
	6	820	795	765	730	695	655	620	585	555	0.313
30/6	0	710	500	375	300	245	210	180	160	140	2.258
	1	1025	765	605	495	415					1.202
	2	1230	980	795	665	565	490	435	385		0.819
	3	1360	1135	955	810	700	615	545	490	445	0.621
	4	1445	1255	1080	935	820	725	650	585	535	0.500
	5	1500	1340	1185	1045	925	830	745	675	620	0.419
	6	1540	1405	1265	1135	1020	920	835	760	700	0.360
30/4	0	610	455	355	290	240	200	175	155	135	2.540
	1	790	650	540	455	390					1.277
	2	880	770	670	580	510	455	405	370		0.853
	3	925	840	755	680	610	550	500	455	415	0.640
	4	950	890	820	750	685	625	575	530	490	0.513
	5	965	920	860	800	745	690	640	595	555	0.427
	6	975	940	890	840	790	740	695	650	610	0.366

* DESIGN SHEAR SHOWN ABOVE MAY BE LIMITED BY SHEAR BUCKLING. SEE TABLE BELOW.
THE SHADED VALUES DO NOT COMPLY WITH THE MINIMUM SPACING REQUIREMENTS FOR SIDE-LAP CONNECTIONS AND SHALL NOT BE USED EXCEPT WITH PROPERLY SPACED SIDE-LAP CONNECTIONS.

Φ(Buckling): 0.80 Ω(Buckling): 2.00

DECK PROFILE	I in^4/ft	NOMINAL DIAPHRAGM SHEAR DUE TO PANEL BUCKLING (S_n), PLF / SPAN, FT 2.0	3.0	4.0	5.0	6.0	7.0	8.0	9.0	10.0
NR	0.181	20860	9270	5215	3335	2320	1705	1305	1030	835
IR	0.196	22140	9840	5535	3545	2460	1805	1385	1095	885
WR	0.284	29240	12995	7310	4680	3250	2385	1830	1445	1170

NOTE:
ASD Required Strength (Service Applied Load) <= Minimum [Nominal Shear Strength / Ω(EQ or WIND), Nominal Buckling Strength S_n / Ω(Buckling)]
LRFD Required Strength (Factored Applied Load) <= Minimum [Φ(EQ or WIND) x Nominal Shear Strength, Φ(Buckling) x Nominal Buckling Strength S_n]

Table 6. 18 gage deck, 18 gage framing

1.5(WR,IR,NR)	t=design thickness= 0.0358 in.	20 Gage	Φ(EQ): 0.65	Ω(EQ): 2.50
Support Framing	t=design thickness= 0.0451 in.	18 Gage	Φ(WIND): 0.70	Ω(WIND): 2.35
SUPPORT FASTENING:	#12 or #14 screws		Φ(Other): 0.65	Ω(Other): 2.50
SIDE-LAP FASTENING:	#10 screws			

FASTENER LAYOUT	SIDE-LAP CONN/SPAN	MAXIMUM NOMINAL SHEAR STRENGTH, PLF SPAN, FT 2.0	3.0	4.0	5.0	6.0	7.0	8.0	9.0	10.0	K1
36/9	0	1180	875	685	545	450	380	330	285	260	0.695
	1	1355	1050	840	695	580					0.506
	2	1490	1195	975	815	695	600	520	460		0.398
	3	1590	1315	1095	925	800	700	615	545	490	0.328
	4	1665	1415	1200	1030	895	790	700	630	565	0.279
	5	1725	1495	1290	1120	985	870	780	705	640 *	0.242
	6	1770	1565	1370	1205	1065	950	850	770 *	705 *	0.214
36/7	0	790	560	425	335	280	235	205	180	160	1.042
	1	1025	760	595	490	405					0.668
	2	1195	930	745	620	525	455	395	350		0.491
	3	1315	1065	880	740	635	555	490	435	390	0.389
	4	1400	1175	990	845	730	645	570	515	465	0.322
	5	1465	1265	1085	940	825	730	650	585	535	0.274
	6	1510	1335	1170	1025	905	805	725	655	600 *	0.239
36/5	0	670	495	390	310	255	215	190	165	150	1.250
	1	830	660	535	445	380					0.748
	2	930	780	655	555	480	425	375	335		0.533
	3	990	865	750	650	570	505	455	410	375	0.415
	4	1030	925	820	730	650	580	525	475	435	0.339
	5	1055	970	880	790	715	645	590	540	495	0.287
	6	1075	1005	925	845	770	705	645	595	550	0.248
36/4	0	510	380	300	235	195	165	140	120	110	1.563
	1	655	535	440	370	315					0.849
	2	730	635	545	470	410	365	325	295		0.583
	3	775	695	620	550	490	440	395	360	330	0.444
	4	800	740	675	610	555	505	460	420	390	0.358
	5	815	765	710	655	605	555	515	475	440	0.301
	6	825	785	740	695	645	600	560	520	485	0.259
30/6	0	725	510	380	300	250	210	180	160	145	1.389
	1	975	720	560	455	375					0.856
	2	1160	895	715	590	500	430	375	330		0.619
	3	1290	1035	850	710	610	530	470	415	375	0.485
	4	1385	1155	965	820	710	625	555	495	450	0.398
	5	1450	1245	1065	920	800	710	635	570	520	0.338
	6	1500	1320	1150	1005	885	790	710	640	585	0.293
30/4	0	620	465	365	290	240	205	175	155	140	1.563
	1	770	620	505	425	365					0.919
	2	855	730	620	530	460	405	360	325		0.651
	3	910	805	705	620	545	485	435	395	360	0.504
	4	940	855	770	690	620	555	505	460	420	0.411
	5	960	895	820	745	680	615	565	520	480	0.347
	6	975	920	855	790	725	670	615	570	530	0.301

* DESIGN SHEAR SHOWN ABOVE MAY BE LIMITED BY SHEAR BUCKLING. SEE TABLE BELOW.
THE SHADED VALUES DO NOT COMPLY WITH THE MINIMUM SPACING REQUIREMENTS FOR SIDE-LAP CONNECTIONS AND SHALL NOT BE USED EXCEPT WITH PROPERLY SPACED SIDE-LAP CONNECTIONS.

Φ(Buckling): 0.80 Ω(Buckling): 2.00

DECK PROFILE	I in^4/ft	NOMINAL DIAPHRAGM SHEAR DUE TO PANEL BUCKLING (S_n), PLF / SPAN, FT 2.0	3.0	4.0	5.0	6.0	7.0	8.0	9.0	10.0
NR	0.128	13030	5790	3260	2085	1450	1065	815	645	520
IR	0.139	13865	6160	3465	2220	1540	1130	865	685	555
WR	0.198	18075	8035	4520	2890	2010	1475	1130	895	725

NOTE:
ASD Required Strength (Service Applied Load) <= Minimum [Nominal Shear Strength / Ω(EQ or WIND), Nominal Buckling Strength S_n / Ω(Buckling)]
LRFD Required Strength (Factored Applied Load) <= Minimum [Φ(EQ or WIND) x Nominal Shear Strength, Φ(Buckling) x Nominal Buckling Strength S_n]

Table 7. 20 gage deck, 18 gage framing

1.5(WR,IR,NR) t=design thickness= 0.0295 in. 22 Gage Φ(EQ): 0.65 Ω(EQ): 2.50
Support Framing t=design thickness= 0.0451 in. 18 Gage Φ(WIND): 0.70 Ω(WIND): 2.35
SUPPORT FASTENING: #12 or #14 screws Φ(Other): 0.65 Ω(Other): 2.50
SIDE-LAP FASTENING: #10 screws

FASTENER LAYOUT	SIDE-LAP CONN./SPAN	MAXIMUM NOMINAL SHEAR STRENGTH, PLF SPAN, FT 2.0	3.0	4.0	5.0	6.0	7.0	8.0	9.0	10.0	K1
36/9	0	1065	790	620	490	400	340	290	260	235	0.366
	1	1210	935	745	615	510					0.301
	2	1325	1055	860	715	610	520	450	400		0.255
	3	1415	1160	960	810	700	610	530	470	425 *	0.222
	4	1480	1245	1050	895	780	685	610	540 *	485 *	0.196
	5	1535	1320	1130	975	855	755	675 *	605 *	550 *	0.176
	6	1575	1380	1200	1050	920	820	735 *	665 *	605 *	0.159
36/7	0	715	505	385	300	250	210	180	160	145	0.549
	1	905	670	525	430	355					0.414
	2	1055	815	650	540	455	390	340	300		0.333
	3	1160	935	765	640	545	475	420	370	335	0.278
	4	1240	1030	860	730	630	550	490	440	400	0.239
	5	1300	1110	945	810	710	625	555	500	455 *	0.209
	6	1345	1175	1020	885	780	690	620	560 *	510 *	0.186
36/5	0	605	450	350	280	230	195	165	150	135	0.659
	1	740	585	470	395	335					0.474
	2	825	685	575	485	420	370	325	290		0.370
	3	880	760	655	565	495	440	390	355	320	0.304
	4	920	820	720	635	560	500	450	410	375	0.257
	5	945	860	770	690	620	560	505	465	425 *	0.223
	6	960	890	815	740	670	610	555	510	470 *	0.197
36/4	0	460	345	270	210	170	145	125	110	100	0.824
	1	585	470	385	325	275					0.554
	2	650	560	475	410	355	315	280	250		0.417
	3	690	615	545	480	425	380	340	310	285	0.334
	4	715	655	590	535	480	435	395	360	330	0.279
	5	730	680	630	575	525	480	440	410	375	0.240
	6	740	700	655	610	565	520	485	450	415	0.210
30/6	0	655	460	340	270	220	190	160	145	130	0.732
	1	865	630	495	395	330					0.538
	2	1020	780	620	510	435	370	320	285		0.425
	3	1135	905	735	615	525	455	400	355	320	0.351
	4	1220	1005	835	710	610	535	475	425	380	0.299
	5	1285	1090	925	790	690	605	540	485	440 *	0.261
	6	1335	1160	1000	870	760	675	605	545 *	495 *	0.231
30/4	0	560	420	330	260	215	180	155	140	125	0.823
	1	685	550	445	375	320					0.585
	2	760	645	540	465	400	355	315	280		0.454
	3	810	710	615	540	475	420	375	340	310	0.371
	4	840	760	675	600	535	480	435	395	360	0.314
	5	860	795	720	650	590	535	485	445	410	0.272
	6	875	820	755	695	635	580	535	490	455 *	0.240

* DESIGN SHEAR SHOWN ABOVE MAY BE LIMITED BY SHEAR BUCKLING. SEE TABLE BELOW.
THE SHADED VALUES DO NOT COMPLY WITH THE MINIMUM SPACING REQUIREMENTS FOR SIDE-LAP CONNECTIONS AND SHALL NOT BE USED EXCEPT WITH PROPERLY SPACED SIDE-LAP CONNECTIONS.

Φ(Buckling): 0.80 Ω(Buckling): 2.00

DECK PROFILE	I in^4/ft	NOMINAL DIAPHRAGM SHEAR DUE TO PANEL BUCKLING (S_n), PLF / SPAN, FT 2.0	3.0	4.0	5.0	6.0	7.0	8.0	9.0	10.0
NR	0.099	9295	4130	2325	1485	1035	760	580	460	370
IR	0.108	9920	4410	2480	1590	1100	810	620	490	395
WR	0.152	12820	5700	3205	2050	1425	1045	800	635	515

NOTE:
ASD Required Strength (Service Applied Load) <= Minimum [Nominal Shear Strength / Ω(EQ or WIND), Nominal Buckling Strength S_n / Ω(Buckling)]
LRFD Required Strength (Factored Applied Load) <= Minimum [ΦΦ(EQ or WIND) x Nominal Shear Strength, Φ(Buckling) x Nominal Buckling Strength S_n]

Table 8. 22 gage deck, 18 gage framing

1.5(WR,IR,NR) t=design thickness= 0.0474 in. 18 Gage Φ(EQ): 0.65 Ω(EQ): 2.50
Support Framing t=design thickness= 0.0346 in. 20 Gage Φ(WIND): 0.70 Ω(WIND): 2.35
SUPPORT FASTENING: #12 or #14 screws Φ(Other): 0.65 Ω(Other): 2.50
SIDE-LAP FASTENING: #10 screws

FASTENER LAYOUT	SIDE-LAP CONN/SPAN	MAXIMUM NOMINAL SHEAR STRENGTH, PLF SPAN, FT 2.0	3.0	4.0	5.0	6.0	7.0	8.0	9.0	10.0	K1
36/9	0	775	575	450	365	300	255	220	190	170	1.395
	1	980	785	640	535	460					0.845
	2	1095	935	790	680	565	485	425	375		0.606
	3	1165	1030	905	790	660	565	495	440	395	0.472
	4	1205	1100	990	885	755	645	565	500	450	0.387
	5	1235	1150	1055	960	850	725	635	565	510	0.328
	6	1250	1185	1100	1020	940	805	705	630	565	0.284
36/7	0	520	370	280	225	185	155	135	120	105	2.093
	1	785	615	495	410	345					1.058
	2	925	775	655	525	440	375	330	295		0.708
	3	995	880	770	640	535	455	400	355	320	0.532
	4	1040	950	855	755	630	540	470	420	375	0.426
	5	1065	995	915	840	720	620	540	480	435	0.355
	6	1080	1025	960	895	815	700	610	545	490	0.305
36/5	0	440	325	255	205	170	145	125	110	100	2.511
	1	615	515	430	365	305					1.156
	2	680	610	540	475	400	340	300	265		0.751
	3	710	660	610	555	490	420	370	330	295	0.556
	4	725	690	650	610	565	500	440	390	350	0.441
	5	730	705	675	645	610	575	510	455	410	0.366
	6	735	720	695	665	640	605	575	515	465	0.312
36/4	0	335	250	195	155	130	110	95	80	75	3.140
	1	485	415	360	310	260					1.273
	2	525	485	445	405	355	305	265	235		0.798
	3	545	520	490	455	425	385	335	300	270	0.581
	4	550	535	515	490	465	440	410	365	325	0.457
	5	555	545	530	510	490	470	450	425	385	0.377
	6	560	550	535	525	510	490	475	455	440	0.320
30/6	0	480	335	255	200	165	140	120	105	95	2.791
	1	765	590	470	385	320					1.338
	2	910	760	620	495	415	355	310	275		0.880
	3	990	870	760	610	510	435	380	340	305	0.655
	4	1035	945	850	725	605	515	450	400	360	0.522
	5	1060	990	910	830	695	595	525	465	420	0.434
	6	1080	1020	955	885	790	680	595	525	475	0.371
30/4	0	410	305	240	195	160	135	115	105	90	3.139
	1	565	480	410	350	295					1.413
	2	620	565	505	455	390	335	290	260		0.912
	3	645	605	565	520	480	415	365	320	290	0.673
	4	655	630	600	565	530	495	435	385	345	0.533
	5	660	645	620	595	565	535	505	450	405	0.442
	6	665	650	635	610	590	565	540	510	460	0.377

* DESIGN SHEAR SHOWN ABOVE MAY BE LIMITED BY SHEAR BUCKLING. SEE TABLE BELOW.
THE SHADED VALUES DO NOT COMPLY WITH THE MINIMUM SPACING REQUIREMENTS FOR SIDE-LAP CONNECTIONS AND SHALL NOT BE USED EXCEPT WITH PROPERLY SPACED SIDE-LAP CONNECTIONS.

Φ(Buckling): 0.80 Ω(Buckling): 2.00

DECK PROFILE	I in^4/ft	NOMINAL DIAPHRAGM SHEAR DUE TO PANEL BUCKLING (S_n), PLF / SPAN, FT 2.0	3.0	4.0	5.0	6.0	7.0	8.0	9.0	10.0
NR	0.181	20860	9270	5215	3335	2320	1705	1305	1030	835
IR	0.196	22140	9840	5535	3545	2460	1805	1385	1095	885
WR	0.284	29240	12995	7310	4680	3250	2385	1830	1445	1170

NOTE:
ASD Required Strength (Service Applied Load) <= Minimum [Nominal Shear Strength / Ω(EQ or WIND), Nominal Buckling Strength S_n / Ω(Buckling)]
LRFD Required Strength (Factored Applied Load) <= Minimum [Φ(EQ or WIND) x Nominal Shear Strength, Φ(Buckling) x Nominal Buckling Strength S_n]

Table 9. 18 gage deck, 20 gage framing

1.5(WR,IR,NR) t=design thickness= 0.0358 in. 20 Gage Φ(EQ): 0.65 Ω(EQ): 2.50
Support Framing t=design thickness= 0.0346 in. 20 Gage Φ(WIND): 0.70 Ω(WIND): 2.35
SUPPORT FASTENING: #12 or #14 screws Φ(Other): 0.65 Ω(Other): 2.50
SIDE-LAP FASTENING: #10 screws

FASTENER LAYOUT	SIDE-LAP CONN./SPAN	MAXIMUM NOMINAL SHEAR STRENGTH, PLF SPAN, FT 2.0	3.0	4.0	5.0	6.0	7.0	8.0	9.0	10.0	K1
36/9	0	775	575	450	360	295	250	215	190	170	0.961
	1	940	740	600	500	425					0.634
	2	1050	870	725	615	530	465	410	360		0.473
	3	1120	965	825	710	620	550	490	440	395	0.377
	4	1165	1035	905	795	705	630	565	500	450	0.313
	5	1200	1085	975	870	775	700	635	565	510	0.268
	6	1220	1130	1025	930	840	760	695	630	565	0.234
36/7	0	520	370	280	220	185	155	135	120	105	1.441
	1	735	560	445	365	310					0.812
	2	870	705	580	490	420	365	325	290		0.565
	3	950	810	690	590	515	455	400	355	320	0.434
	4	1000	885	775	680	600	535	470	420	375	0.352
	5	1030	935	840	750	670	605	540	480	435	0.296
	6	1055	975	890	810	735	665	610	545	490	0.255
36/5	0	440	325	255	205	170	145	125	110	95	1.729
	1	585	480	395	335	285					0.896
	2	655	570	495	430	380	335	300	265		0.605
	3	690	625	565	505	450	410	370	330	295	0.456
	4	710	660	610	560	510	465	430	390	350	0.367
	5	720	685	645	600	555	515	475	445	410	0.306
	6	730	700	665	630	590	555	520	485	455	0.263
36/4	0	335	250	195	155	125	105	90	80	70	2.162
	1	460	390	325	280	240					1.000
	2	510	460	410	365	325	290	265	235		0.650
	3	530	495	460	420	385	350	325	295	270	0.482
	4	545	520	490	460	425	395	370	345	320	0.383
	5	550	530	510	485	460	430	405	385	360	0.317
	6	555	540	520	500	480	455	435	415	390	0.271
30/6	0	480	335	250	200	165	140	120	105	95	1.921
	1	710	535	425	345	290					1.033
	2	850	685	560	470	405	350	310	275		0.706
	3	940	795	675	580	500	435	380	340	305	0.536
	4	990	875	760	665	590	515	450	400	360	0.433
	5	1025	930	830	740	660	595	525	465	420	0.362
	6	1050	970	885	800	725	660	595	525	475	0.312
30/4	0	410	305	240	190	160	135	115	100	90	2.162
	1	540	450	375	315	275					1.098
	2	600	530	465	410	360	320	290	260		0.736
	3	630	580	525	475	430	390	355	320	290	0.554
	4	645	605	565	520	480	445	410	380	345	0.444
	5	655	625	590	555	520	485	455	425	395	0.370
	6	660	640	610	580	550	520	490	460	435	0.317

* DESIGN SHEAR SHOWN ABOVE MAY BE LIMITED BY SHEAR BUCKLING. SEE TABLE BELOW.
THE SHADED VALUES DO NOT COMPLY WITH THE MINIMUM SPACING REQUIREMENTS FOR SIDE-LAP CONNECTIONS AND SHALL NOT BE USED EXCEPT WITH PROPERLY SPACED SIDE-LAP CONNECTIONS.

Φ(Buckling): 0.80 Ω(Buckling): 2.00

DECK PROFILE	I in^4/ft	NOMINAL DIAPHRAGM SHEAR DUE TO PANEL BUCKLING (S_n), PLF / SPAN, FT 2.0	3.0	4.0	5.0	6.0	7.0	8.0	9.0	10.0
NR	0.128	13030	5790	3260	2085	1450	1065	815	645	520
IR	0.139	13865	6160	3465	2220	1540	1130	865	685	555
WR	0.198	18075	8035	4520	2890	2010	1475	1130	895	725

NOTE:
ASD Required Strength (Service Applied Load) <= Minimum [Nominal Shear Strength / Ω(EQ or WIND), Nominal Buckling Strength S_n / Ω(Buckling)]
LRFD Required Strength (Factored Applied Load) <= Minimum [Φ(EQ or WIND) x Nominal Shear Strength, Φ(Buckling) x Nominal Buckling Strength S_n]

Table 10. 20 gage deck, 20 gage framing

1.5(WR,IR,NR) t=design thickness= 0.0295 in. 22 Gage Φ(EQ): 0.65 Ω(EQ): 2.50
Support Framing t=design thickness= 0.0346 in. 20 Gage Φ(WIND): 0.70 Ω(WIND): 2.35
SUPPORT FASTENING: #12 or #14 screws Φ(Other): 0.65 Ω(Other): 2.50
SIDE-LAP FASTENING: #10 screws

FASTENER LAYOUT	SIDE-LAP CONN/SPAN	MAXIMUM NOMINAL SHEAR STRENGTH, PLF SPAN, FT 2.0	3.0	4.0	5.0	6.0	7.0	8.0	9.0	10.0	K1
36/9	0	810	600	470	375	305	260	220	195	175	0.688
	1	950	740	595	495	410					0.489
	2	1050	855	705	590	505	440	380	340		0.379
	3	1125	945	795	680	590	515	460	410	365	0.310
	4	1175	1015	875	760	665	585	525	475	430 *	0.262
	5	1215	1075	940	825	730	650	585	530 *	485 *	0.227
	6	1240	1120	1000	885	790	710	640	585 *	535 *	0.200
36/7	0	540	385	290	230	190	160	140	125	110	1.032
	1	730	550	430	355	295					0.641
	2	855	680	550	460	390	340	295	265		0.464
	3	940	780	650	550	475	415	370	335	300	0.364
	4	1000	860	735	635	555	490	435	395	360	0.300
	5	1040	920	805	705	620	555	495	450	410	0.254
	6	1065	965	860	765	680	615	555	505	460 *	0.221
36/5	0	460	340	265	215	175	150	125	115	100	1.238
	1	585	470	385	320	275					0.714
	2	655	560	475	410	355	315	280	255		0.502
	3	695	620	545	480	425	380	340	310	285	0.387
	4	720	660	595	535	480	435	395	360	330	0.315
	5	740	690	635	580	530	485	445	410	375	0.265
	6	750	710	660	615	570	525	485	450	420	0.229
36/4	0	350	260	205	160	130	110	95	85	75	1.548
	1	465	380	315	270	230					0.808
	2	515	455	395	345	305	270	245	220		0.546
	3	540	495	450	405	365	330	300	275	250	0.413
	4	555	525	485	445	410	375	345	320	295	0.332
	5	565	540	510	475	445	410	385	355	335	0.277
	6	570	550	525	500	470	440	415	390	365	0.238
30/6	0	500	350	260	205	170	145	125	110	100	1.376
	1	700	520	405	330	275					0.820
	2	835	655	530	440	375	325	280	250		0.584
	3	925	760	635	535	460	405	355	320	290	0.453
	4	990	845	720	620	540	475	425	380	345	0.370
	5	1030	905	790	690	610	540	485	440	400	0.313
	6	1060	955	850	755	670	600	545	495	450 *	0.271
30/4	0	425	320	250	200	165	140	120	105	95	1.548
	1	545	440	365	305	265					0.878
	2	605	525	450	390	340	300	270	245		0.612
	3	640	575	510	455	405	365	330	300	275	0.470
	4	660	610	555	505	460	415	380	350	320	0.382
	5	670	630	590	545	500	460	425	390	365	0.321
	6	680	650	610	570	535	495	460	430	400	0.277

* DESIGN SHEAR SHOWN ABOVE MAY BE LIMITED BY SHEAR BUCKLING. SEE TABLE BELOW.
THE SHADED VALUES DO NOT COMPLY WITH THE MINIMUM SPACING REQUIREMENTS FOR SIDE-LAP CONNECTIONS AND SHALL NOT BE USED EXCEPT WITH PROPERLY SPACED SIDE-LAP CONNECTIONS.

Φ(Buckling): 0.80 Ω(Buckling): 2.00

DECK PROFILE	I in^4/ft	NOMINAL DIAPHRAGM SHEAR DUE TO PANEL BUCKLING (S_n), PLF / SPAN, FT 2.0	3.0	4.0	5.0	6.0	7.0	8.0	9.0	10.0
NR	0.099	9295	4130	2325	1485	1035	760	580	460	370
IR	0.108	9920	4410	2480	1590	1100	810	620	490	395
WR	0.152	12820	5700	3205	2050	1425	1045	800	635	515

NOTE:
ASD Required Strength (Service Applied Load) <= Minimum [Nominal Shear Strength / Ω(EQ or WIND), Nominal Buckling Strength S_n / Ω(Buckling)]
LRFD Required Strength (Factored Applied Load) <= Minimum [Φ(EQ or WIND) x Nominal Shear Strength, Φ(Buckling) x Nominal Buckling Strength S_n]

Table 11. 22 gage deck, 18 gage framing

Steel Roof Deck on Cold-Formed Steel Framing - Quiz

Updated: 8/04/2020

1. Basic steel diaphragm theory is found in _____ .

    a. Steel Deck Institute *Diaphragm Design Manual*
    b. Metal Construction Association *Primer on Diaphragm Design*
    c. Both a and b
    d. None of the above

2. Screw strength for support fasteners is determined in accordance with:

    a. AISC *Specification for Structural Steel Buildings*
    b. AISI *North American Specification for the Design of Cold-Formed Steel Structural Members*
    c. Steel Deck Institute *Diaphragm Design Manual*
    d. Metal Construction Association *Primer on Diaphragm Design*

3. Screw strength for sidelap fasteners is determined in accordance with:

    a. AISC *Specification for Structural Steel Buildings*
    b. AISI *North American Specification for the Design of Cold-Formed Steel Structural Members*
    c. Steel Deck Institute *Diaphragm Design Manual*
    d. Metal Construction Association *Primer on Diaphragm Design*

4. Screw flexibility for support fasteners is determined in accordance with:

    a. AISC *Specification for Structural Steel Buildings*
    b. AISI *North American Specification for the Design of Cold-Formed Steel Structural Members*
    c. Steel Deck Institute *Diaphragm Design Manual*
    d. Metal Construction Association *Primer on Diaphragm Design*

5. Screw flexibility for sidelap fasteners is determined in accordance with:

    a. AISC *Specification for Structural Steel Buildings*
    b. AISI *North American Specification for the Design of Cold-Formed Steel Structural Members*
    c. Steel Deck Institute *Diaphragm Design Manual*
    d. Metal Construction Association *Primer on Diaphragm Design*

6. The deck warping constant for 22 gage, WR deck with a 36/7 attachment pattern is_____ feet.

   a. 169
   b. 175
   c. 758
   d. 129

7. The diaphragm strength is the lesser of the shear strength and _____ .

   a. panel buckling
   b. screw flexibility
   c. steel yield strength
   d. uplift resistance

8. The ASD Factor of Safety (Ω) for panel shear strength when loaded by wind is:

   a. 2.35
   b. 2.50
   c. 2.00
   d. 3.00

9. For 18 gage WR deck and 18 gage framing, with the deck spanning 6 feet and a 36/9 fastener pattern, how many sidelap fasteners per span are required to obtain a nominal resistance of 800 plf?

   a. 0
   b. 1
   c. 3
   d. 5

10. For 22 gage WR deck and 18 gage framing, with the deck spanning 6 feet, the nominal panel buckling resistance is _____ plf?

   a. 460
   b. 1035
   c. 1425
   d. 2050